YAMAHA

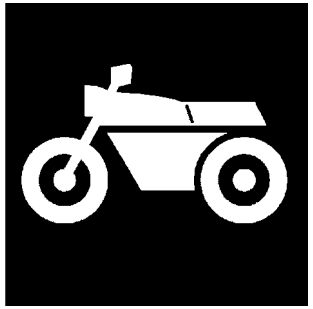

# CATÁLOGO DE PEÇAS

# MT03A ( B091 ) BRASIL

YAMAHA
GENUINE
Parts & Accessories

1RB09-280P1

( )

MT03A
CATÁLOGO DE PEÇAS
©2016, Yamaha Motor do Brasil Ltda.
1ª edição, Março 2016
Todos os direitos reservados.
É proibida expressamente toda e qualquer
reimpressão ou utilização sem a autorização
por escrita da
Yamaha Motor do Brasil Ltda.
Impresso no Brasil.

MT03A (MS1)

MT03A (RM7)

MT03A (SMX)

# PREFÁCIO

Este Catálogo de Peças se refere as Peças dos modelos relacionados na capa. Quando for solicitar peças de reposição para estes Modelos, recorra a este Catálogo de Peças e especifique corretamente os códigos e Nomes das Peças.

1. As Modificações ou adições que tenham sido efetuadas após a publicação deste Catálogo de Peças, serão comunicadas a Rede de Concessionárias através das informações de Modificação de Peças (Parts News).

2. Abreviaturas
   Seguem abaixo as abreviaturas utilizadas neste Catálogo de Peças:
   "UR" Uso Restrito para o Código da Peça
   "UN" Uso Necessário
   "AP" Peça Alternativa
   "LM" Fabricação Local (A peça pode ser pedida localmente)
   "F#" No. de Série do Chassi (Aplicação do Número de Série)
   "O/S" Tamanho Maior

3. Peças componentes de conjuntos
   - As peças que são fornecidas dentro de conjuntos estão listadas com um ponto de identificação (.)como segue abaixo.
   - O número que aparece a direita da descrição da Peça indica o número de Peças usado em cada Conjunto Individual.

| No. PEÇA | DESCRIÇÃO | QTDE | OBSERVAÇÕES |
|---|---|---|---|
| 2F5–83310–60 | PISCA DIANTEIRO CONJ. | 2 | |
| 115–83311–60 | .LÂMPADA (6V–18W) | 1 | |

4. Os gráficos que são Aplicados em Peças Coloridas estão representados na coluna "OBSERVAÇÕES", como segue abaixo.

| No. PEÇA | DESCRIÇÃO | QTDE | OBSERVAÇÕES |
|---|---|---|---|
| 2N4–24110–00–X5 | TANQUE DE COMBUSTÍVEL COMPL. | 2 | MXR |
| 3J1–24240–10 | .GRÁFICO, TANQUE DE COMB. | 1 | PARA MXR |

5. Observe que as ilustrações são referentes apenas a indicação dos códigos das peças, e não para montagem. Para montagem, por favor utilize o Manual de Montagem apropriado.

6. O asterisco (*) antes do Número de referência da peça indica a modificação ocorrida após a primeira edição.

7. Aplicação do Número de Série

No. de Série do Chassi

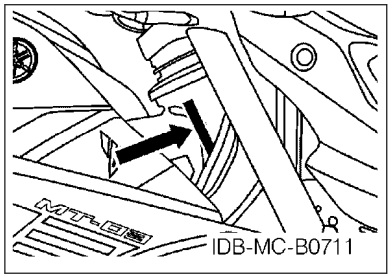


No. de Série do Motor

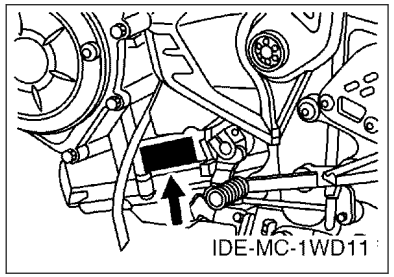


8. Aplicação do Código de Cor (A marca (*) mostra a cor do Modelo.)

| Abreviação | Nome da Cor | Código da Cor |
|---|---|---|
| DPBM15 | DEEP PURPLISH BLUE METALLIC 15 | 1329 |
| LGB | LOW GLOSS BLACK | 0098 |
| MBL2 | MAT BLACK 2 | 0582 |
| MS1(*) | MAT SILVER 1 | 1160 |
| RM7(*) | RED METALLIC 7 | 1218 |
| S8 | SILVER 8 | 0895 |
| SL | SILVER | 0035 |
| SMX(*) | BLACK METALLIC X | 0903 |
| | | |
| | | |

9. Aplicação do No. de Série Inicial

No. de Série do Chassi

| No. Série | Nome do Modelo | Código do Modelo |
|---|---|---|
| 9C6RH1120H0000100 | MT03A | B091 |
| | | |
| | | |
| | | |
| | | |

No. de Série do Motor

| No. Série | Nome do Modelo | Código do Modelo |
|---|---|---|
| H403E-002706 | MT03A | B091 |
| | | |
| | | |
| | | |
| | | |

# ÍNDICE GERAL

## MOTOR

CABECOTE DO CILINDRO..... 1
VIRABREQUIM E PISTAO.....3
VALVULA.....5
CORRENTE DO EIXO DE COMANDO.....6
BOMBA DE AGUA.....7
MANGUEIRA DO RADIADOR.....8
BOMBA DE OLEO.....10
ADMISSAO.....11
ESCAPAMENTO..... 13
CARCACA DO MOTOR..... 15
TAMPA DA CARCACA 1.....16
EMBREAGEM DA PARTIDA.....17
EMBREAGEM..... 18
TRANSMISSAO.....19
EIXO TRAMBULADOR.....21
EIXO DE MUDANCA.....22

## CHASSI

CHASSI..... 23
PARA-LAMA.....25
TAMPA LATERAL..... 27
GARFO TRASEIRO. SUSPENSAO 1..... 30
MESA DO GUIDAO.....31
GARFO DIANTEIRO..... 32
TANQUE DE COMBUSTIVEL.....34
TANQUE DE COMBUSTIVEL 2.....36
ASSENTO.....39
RODA DIANTEIRA 1..... 41
PINCA DE FREIO DIANTEIRA.....42
RODA TRASEIRA 1..... 43
PINCA DE FREIO TRASEIRA.....45
GUIDAO E CABOS.....46
CILINDRO MESTRE DIANTEIRO.....47
CAVALETE. ESTRIBOS. PEDAL.....49
CILINDRO MESTRE TRASEIRO..... 51
GERADOR.....53
MOTOR DE PARTIDA.....54
PISCAS.....55
MEDIDOR.....56
FAROL DIANTEIRO..... 57
LANTERNA TRASEIRA.....59
INTERRUP. DO GUIDAO E MANETE 1..... 60
SISTEMA ELETRICO 1.....61
SISTEMA ELETRICO 2.....63
SISTEMA ELETRICO 3.....65

## ÍNDICE GERAL

ÍNDICE NUMÉRICO.....66

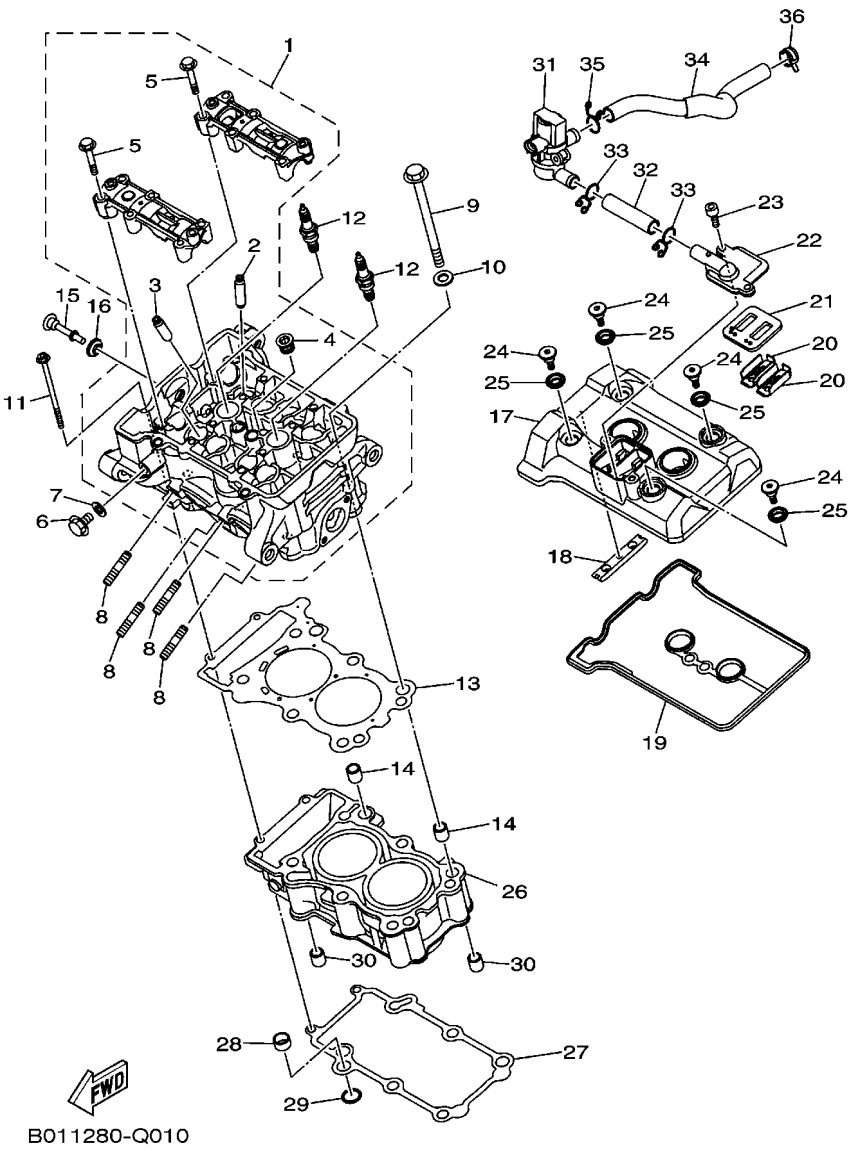


## FIG. 1 CABECOTE DO CILINDRO

| REF. NO. | No. PEÇA | DESCRIÇÃO | B091 | | | | | OBSERVAÇÕES |
|---|---|---|---|---|---|---|---|---|
| 1 | B01–E1102–00 | CABECOTE DO CILINDRO CONJ. | 1 | | | | | |
| 2 | 2MS–E1133–10 | .GUIA DA VALVULA 1 | 4 | | | | | |
| 3 | 1WD–E1133–10 | .GUIA DA VALVULA 1 | 4 | | | | | |
| 4 | 90340–18002 | .TAMPAO DO DRENO | 1 | | | | | |
| 5 | 90105–06027 | .PARAFUSO FLANGE | 12 | | | | | |
| 6 | 95022–08012 | PARAFUSO FLANGE | 1 | | | | | |
| 7 | 90430–08119 | GAXETA | 1 | | | | | |
| 8 | 95612–08625 | PRISIONEIRO | 4 | | | | | |
| 9 | 2MS–11361–00 | PARAFUSO SUPORTE DO CILINDRO 1 | 6 | | | | | |
| 10 | 90201–10845 | ARRUELA PLANA | 6 | | | | | |
| 11 | 90110–06870 | PARAFUSO HEXAGONAL INTERNO | 2 | | | | | |
| 12 | 94700–00872 | VELA DE IGNICAO (NGK CR8E) | 2 | | | | | |
| 13 | 2MS–E1181–00 | GAXETA, CABECOTE DO CILINDRO 1 | 1 | | | | | |
| 14 | 99530–14016 | PINO GUIA | 2 | | | | | |
| 15 | 90109–06898 | PARAFUSO | 1 | | | | | |
| 16 | 1WD–E111G–00 | AMORTIZADOR DE BORRACHA | 1 | | | | | |
| 17 | 1WD–E1191–00 | TAMPA, CABECOTE DO CILINDRO 1 | 1 | | | | | |
| 18 | 1WD–E2241–00 | GUIA LIMITADORA 2 | 1 | | | | | |
| 19 | 1WD–E1193–00 | GAXETA DA TAMPA DO CABECOTE 1 | 1 | | | | | |
| 20 | 5VY–1482K–00 | PLACA | 2 | | | | | |
| 21 | 1WD–E4890–00 | VALVULA DE PALHETA CONJUNTO | 1 | | | | | |
| 22 | 1WD–E4899–00 | TAMPA DA CAIXA | 1 | | | | | |
| 23 | 91312–06020 | PARAFUSO HEXAGONAL | 2 | | | | | |
| 24 | 90109–06899 | PARAFUSO | 4 | | | | | |
| 25 | 1WD–E111G–00 | AMORTIZADOR DE BORRACHA | 4 | | | | | |
| 26 | 2MS–E1311–00 | CILINDRO 1 | 1 | | | | | |
| 27 | 1WD–E1351–00 | GAXETA DO CILINDRO | 1 | | | | | |

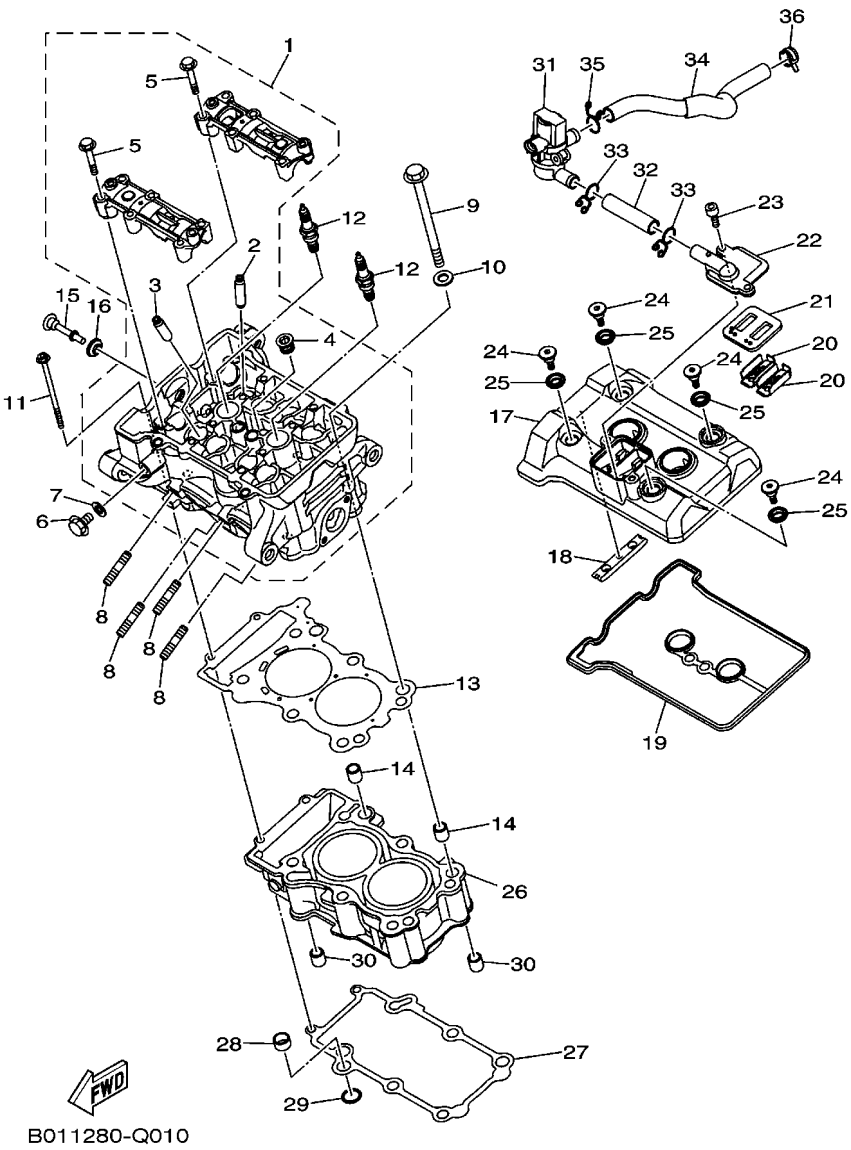


## FIG. 1 CABECOTE DO CILINDRO

| REF. NO. | No. PEÇA | DESCRIÇÃO | B091 | | | | | OBSERVAÇÕES |
|---|---|---|---|---|---|---|---|---|
| 28 | 5NL–12564–00 | TUBO DE AGUA | 1 | | | | | |
| 29 | 93210–16716 | ANEL DE BORRACHA | 1 | | | | | |
| 30 | 99530–14016 | PINO GUIA | 2 | | | | | |
| 31 | 1WD–E4840–00 | DIRECIONADOR DE AR DA VALVULA | 1 | | | | | |
| 32 | 1WD–E4881–00 | MANGUEIRA CURVADA 1 | 1 | | | | | |
| 33 | 90467–16801 | PRESILHA | 2 | | | | | |
| 34 | 1WD–E4882–01 | MANGUEIRA CURVADA 2 | 1 | | | | | |
| 35 | 90467–16801 | PRESILHA | 1 | | | | | |
| 36 | 90467–16800 | PRESILHA | 1 | | | | | |

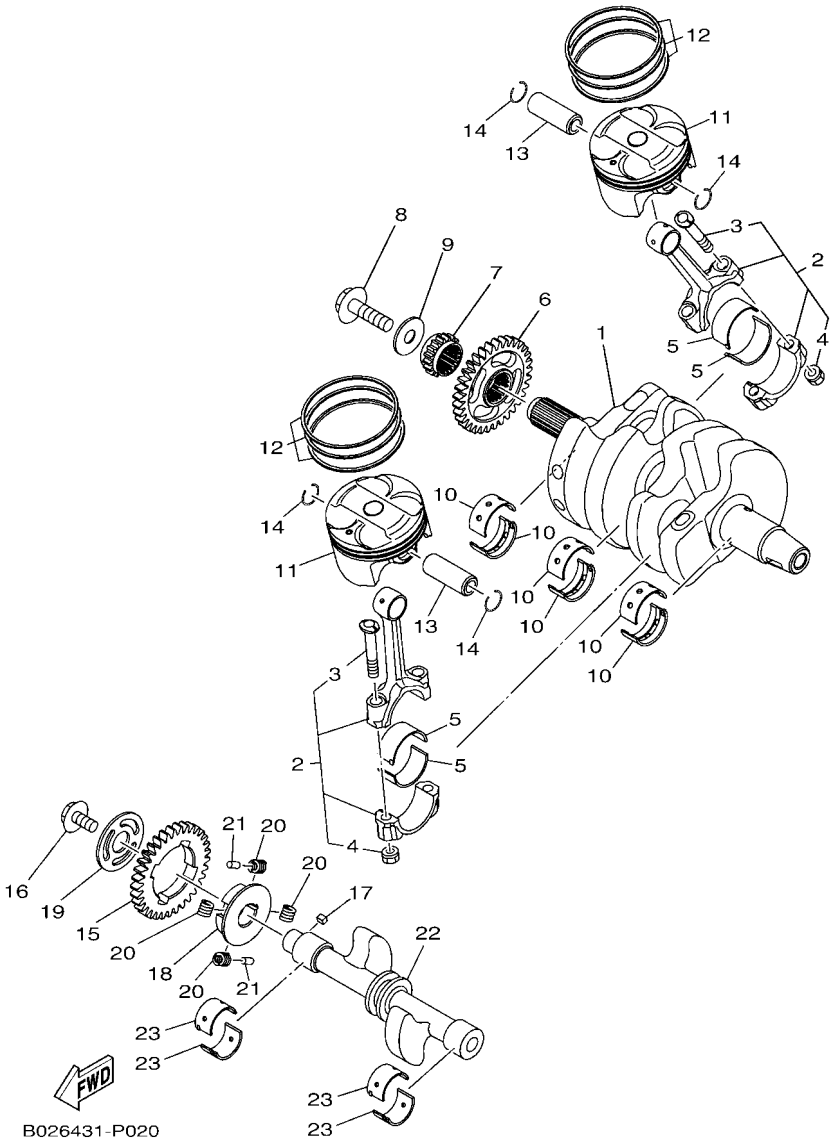


## FIG. 2 VIRABREQUIM E PISTAO

| REF. NO. | No. PEÇA | DESCRIÇÃO | B091 | | | | | OBSERVAÇÕES |
|---|---|---|---|---|---|---|---|---|
| 1 | 1WD–11411–00 | VIRABREQUIM | 1 | | | | | |
| 2 | 1WD–11650–00 | BIELA COMPLETA | 2 | | | | | |
| 3 | 5SL–11654–00 | .PARAFUSO DA BIELA | 2 | | | | | |
| 4 | 90179–07652 | .PORCA | 2 | | | | | |
| 5 | 1WD–11656–00 | BRONZINA PLANA DA BIELA | 4 | | | | | UR AZUL |
| | 1WD–11656–10 | BRONZINA PLANA DA BIELA | 4 | | | | | UR PRETO |
| | 1WD–11656–20 | BRONZINA PLANA DA BIELA | 4 | | | | | UR MARROM |
| | 1WD–11656–30 | BRONZINA PLANA DA BIELA | 4 | | | | | UR VERDE |
| 6 | 1WD–E1536–00 | ENGRENAGEM MOTORA | 1 | | | | | |
| 7 | 1WD–E1549–00 | ENGRENAGEM CORRENTE DO CAME | 1 | | | | | |
| 8 | 90105–10883 | PARAFUSO FLANGE | 1 | | | | | |
| 9 | 90201–102R1 | ARRUELA PLANA | 1 | | | | | |
| 10 | 1WD–11416–00 | ROLAMENTO PLANO DO VIRABREQ. 1 | 6 | | | | | UR AZUL |
| | 1WD–11416–10 | ROLAMENTO PLANO DO VIRABREQ. 1 | 6 | | | | | UR PRETO |
| | 1WD–11416–20 | ROLAMENTO PLANO DO VIRABREQ. 1 | 6 | | | | | UR MARROM |
| | 1WD–11416–30 | ROLAMENTO PLANO DO VIRABREQ. 1 | 6 | | | | | UR VERDE |
| | 1WD–11416–40 | ROLAMENTO PLANO DO VIRABREQ. 1 | 6 | | | | | UR AMARELO |
| 11 | 2MS–E1631–00 | PISTAO (STD) | 2 | | | | | |
| 12 | 2MS–E1603–00 | JOGO DE ANEIS (STD) | 2 | | | | | |
| 13 | 1WD–E1633–00 | PINO DO PISTAO | 2 | | | | | |
| 14 | 93450–16068 | ANEL TRAVA | 4 | | | | | |
| 15 | 1WD–E1531–00 | ENGRENAGEM DO CONTRA PESO | 1 | | | | | |
| 16 | 90105–088F8 | PARAFUSO FLANGE | 1 | | | | | |
| 17 | 90282–04036 | CHAVETA RETA | 1 | | | | | |
| 18 | 1WD–E1496–00 | CUBO RASPADOR DO VIRABREQUIM | 1 | | | | | |
| 19 | 90201–16812 | ARRUELA PLANA | 1 | | | | | |
| 20 | 90501–22800 | MOLA DE COMPRESSAO | 4 | | | | | |

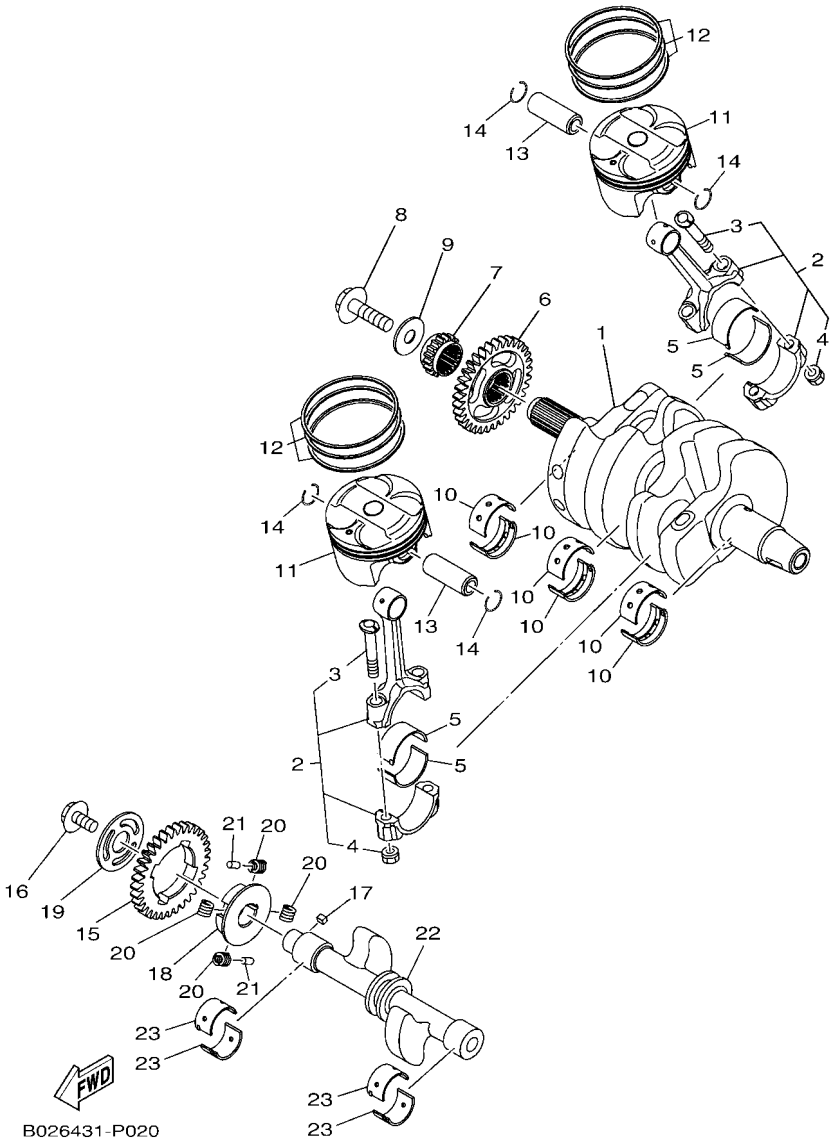


## FIG. 2 VIRABREQUIM E PISTAO

| REF. NO. | No. PEÇA | DESCRIÇÃO | B091 | | | | | OBSERVAÇÕES |
|---|---|---|---|---|---|---|---|---|
| 21 | 93605–10090 | PINO | 2 | | | | | |
| 22 | 1WD–E1454–00 | BALANCEADOR DO VIRABREQUIM | 1 | | | | | |
| 23 | 1WD–11413–00 | ROLAMENTO PLANO DO BALANCEADOR | 4 | | | | | UR AZUL |
| | 1WD–11413–10 | ROLAMENTO PLANO DO BALANCEADOR | 4 | | | | | UR PRETO |
| | 1WD–11413–20 | ROLAMENTO PLANO DO BALANCEADOR | 4 | | | | | UR MARROM |
| | 1WD–11413–30 | ROLAMENTO PLANO DO BALANCEADOR | 4 | | | | | UR VERDE |
| | 1WD–11413–40 | ROLAMENTO PLANO DO BALANCEADOR | 4 | | | | | UR AMARELO |

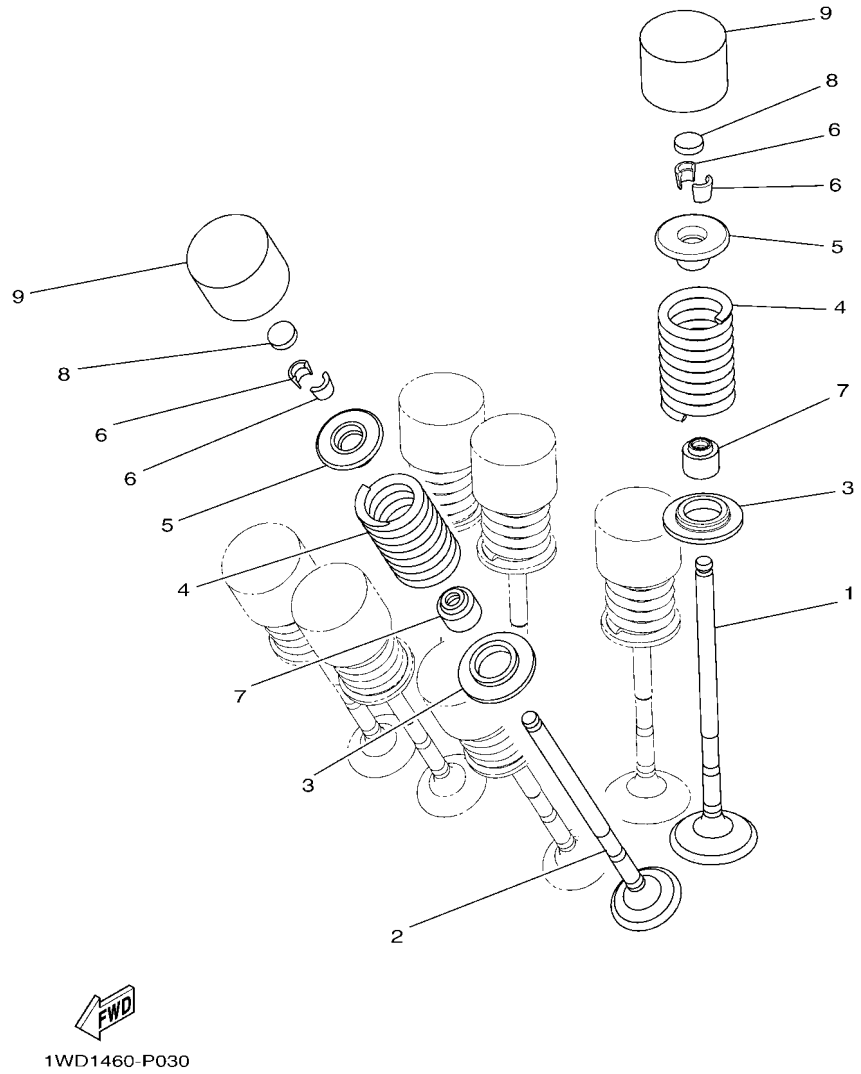


## FIG. 3 VALVULA

| REF. NO. | No. PEÇA | DESCRIÇÃO | B091 | | | | | OBSERVAÇÕES |
|---|---|---|---|---|---|---|---|---|
| 1 | 2MS–E2111–00 | VALVULA DE ADMISSAO | 4 | | | | | |
| 2 | 2MS–E2121–00 | VALVULA DE ESCAPE | 4 | | | | | |
| 3 | 2MS–E2126–00 | ASSENTO DA MOLA DA VALVULA 2 | 8 | | | | | |
| 4 | 2MS–E2113–00 | MOLA INTERNA DA VALVULA | 8 | | | | | |
| 5 | 2MS–E2117–00 | ASSENTO SUPERIOR DA MOLA | 8 | | | | | |
| 6 | 3S0–E2118–00 | TRAVA DA VALVULA | 16 | | | | | |
| 7 | 1PA–E2119–00 | RETENTOR DA HASTE DA VALVULA | 8 | | | | | |
| 8 | 1HX–12168–F0 | PASTILHA DE AJUSTE 2 (1.50) | 8 | | | | | UR |
| | 1HX–12168–H1 | PASTILHA DE AJUSTE 2 (1.55) | 8 | | | | | UR |
| | 1HX–12168–K1 | PASTILHA DE AJUSTE 2 (1.60) | 8 | | | | | UR |
| | 1HX–12168–M1 | PASTILHA DE AJUSTE 2 (1.65) | 8 | | | | | UR |
| | 1HX–12168–R1 | PASTILHA DE AJUSTE 2 (1.70) | 8 | | | | | UR |
| | 1HX–12168–U1 | PASTILHA DE AJUSTE 2 (1.75) | 8 | | | | | UR |
| | 1HX–12168–W1 | PASTILHA DE AJUSTE 2 (1.80) | 8 | | | | | UR |
| | 1HX–12168–Y1 | PASTILHA DE AJUSTE 2 (1.85) | 8 | | | | | UR |
| | 1HX–12169–11 | PASTILHA DE AJUSTE 2 (1.90) | 8 | | | | | UR |
| | 1HX–12169–31 | PASTILHA DE AJUSTE 2 (1.95) | 8 | | | | | UR |
| | 1HX–12169–50 | PASTILHA DE AJUSTE 2 (2.00) | 8 | | | | | UR |
| | 1HX–12169–70 | PASTILHA DE AJUSTE 2 (2.05) | 8 | | | | | UR |
| | 1HX–12169–90 | PASTILHA DE AJUSTE 2 (2.10) | 8 | | | | | UR |
| | 1HX–12169–E0 | PASTILHA DE AJUSTE 2 (2.15) | 8 | | | | | UR |
| | 1HX–12169–G0 | PASTILHA DE AJUSTE 2 (2.20) | 8 | | | | | UR |
| | 1HX–12169–J0 | PASTILHA DE AJUSTE 2 (2.25) | 8 | | | | | UR |
| | 1HX–12169–L0 | PASTILHA DE AJUSTE 2 (2.30) | 8 | | | | | UR |
| | 1HX–12169–N0 | PASTILHA DE AJUSTE 2 (2.35) | 8 | | | | | UR |
| | 1HX–12169–T0 | PASTILHA DE AJUSTE 2 (2.40) | 8 | | | | | UR |
| 9 | 2MS–12153–10 | LEVANTADOR DA VALVULA | 8 | | | | | UR |

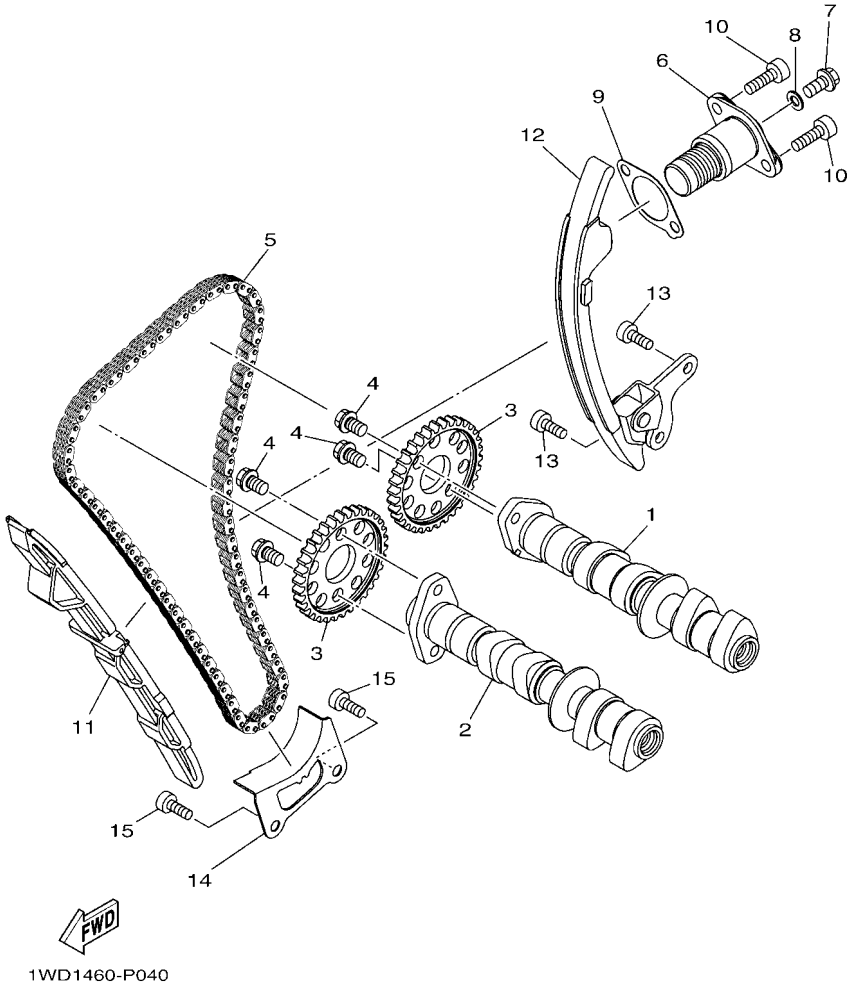


## FIG. 4 CORRENTE DO EIXO DE COMANDO

| REF. NO. | No. PEÇA | DESCRIÇÃO | B091 | | | | | OBSERVAÇÕES |
|---|---|---|---|---|---|---|---|---|
| 1 | B01–E2170–01 | EIXO DE COMANDO COMPLETO 1 | 1 | | | | | |
| 2 | B01–E2180–01 | EIXO DE COMANDO COMPLETO 2 | 1 | | | | | |
| 3 | 1WD–E2176–00 | COROA DA CORRENTE | 2 | | | | | |
| 4 | 90105–07800 | PARAFUSO FLANGE | 4 | | | | | |
| 5 | 94591–61118 | CORRENTE (98XRH2015-118M) | 1 | | | | | |
| 6 | 2MS–12210–00 | TENSIONADOR DA CORRENTE CONJ. | 1 | | | | | |
| 7 | 95022–06008 | PARAFUSO FLANGE | 1 | | | | | |
| 8 | 90430–06014 | GAXETA | 1 | | | | | |
| 9 | 1WD–E2213–00 | GAXETA DA CAIXA DO TENSIONADOR | 1 | | | | | |
| 10 | 91312–06020 | PARAFUSO HEXAGONAL | 2 | | | | | |
| 11 | 1WD–E2251–00 | AMORTIZADOR DA CORRENTE 1 | 1 | | | | | |
| 12 | 2MS–E2252–00 | AMORTIZADOR DA CORRENTE 2 | 1 | | | | | |
| 13 | 90110–06161 | PARAFUSO HEXAGONAL INTERNO | 2 | | | | | |
| 14 | 1WD–E2256–00 | TAMPA DA CORRENTE | 1 | | | | | |
| 15 | 90110–06161 | PARAFUSO HEXAGONAL INTERNO | 2 | | | | | |

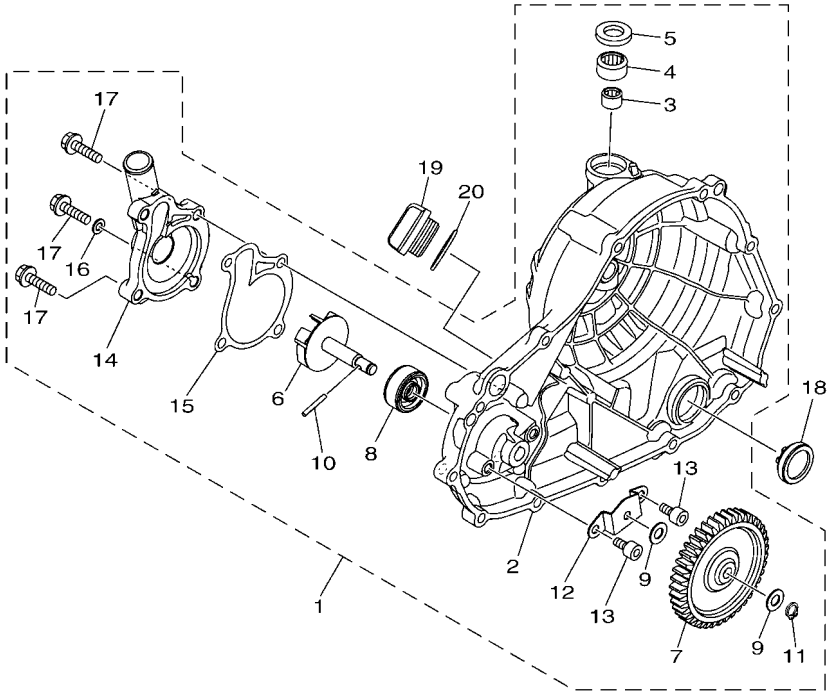


## FIG. 5 BOMBA DE AGUA

| REF. NO. | No. PEÇA | DESCRIÇÃO | B091 | | | | | OBSERVAÇÕES |
|---|---|---|---|---|---|---|---|---|
| 1 | 1WD–E2420–00 | BOMBA DE AGUA COMPLETA | 1 | | | | | |
| 2 | 1WD–E5421–00 | .TAMPA DA CARCACA 2 | 1 | | | | | |
| 3 | 93317–11096 | .ROLAMENTO | 1 | | | | | |
| 4 | 93315–21570 | .ROLAMENTO | 1 | | | | | |
| 5 | 93102–15801 | .RETENTOR DE OLEO | 1 | | | | | |
| 6 | 1WD–E2450–00 | .EIXO IMPULSOR COMPLETO | 1 | | | | | |
| 7 | 1WD–E2453–00 | .ENGRENAGEM | 1 | | | | | |
| 8 | 33S–E2223–00 | .VEDACAO | 1 | | | | | |
| 9 | 33S–E2456–00 | .ARRUELA | 2 | | | | | |
| 10 | 1WD–E319L–00 | .PINO LISO | 1 | | | | | |
| 11 | 99009–08400 | .ANEL TRAVA | 1 | | | | | |
| 12 | 1WD–E2681–00 | .PLACA | 1 | | | | | |
| 13 | 91312–06010 | .PARAFUSO HEXAGONAL | 2 | | | | | |
| 14 | 1WD–E2422–00 | .TAMPA DA CAIXA | 1 | | | | | |
| 15 | 1WD–E2428–00 | .GAXETA DA TAMPA CAIXA 2 | 1 | | | | | |
| 16 | 90430–06014 | .GAXETA | 1 | | | | | |
| 17 | 95022–06025 | .PARAFUSO FLANGE | 3 | | | | | |
| 18 | 2H7–15361–00 | MEDIDOR DO NIVEL DE OLEO | 1 | | | | | |
| 19 | 1WD–E5362–00 | TAMPAO DO NIVEL DE OLEO | 1 | | | | | |
| 20 | 93210–27807 | ANEL DE BORRACHA | 1 | | | | | |

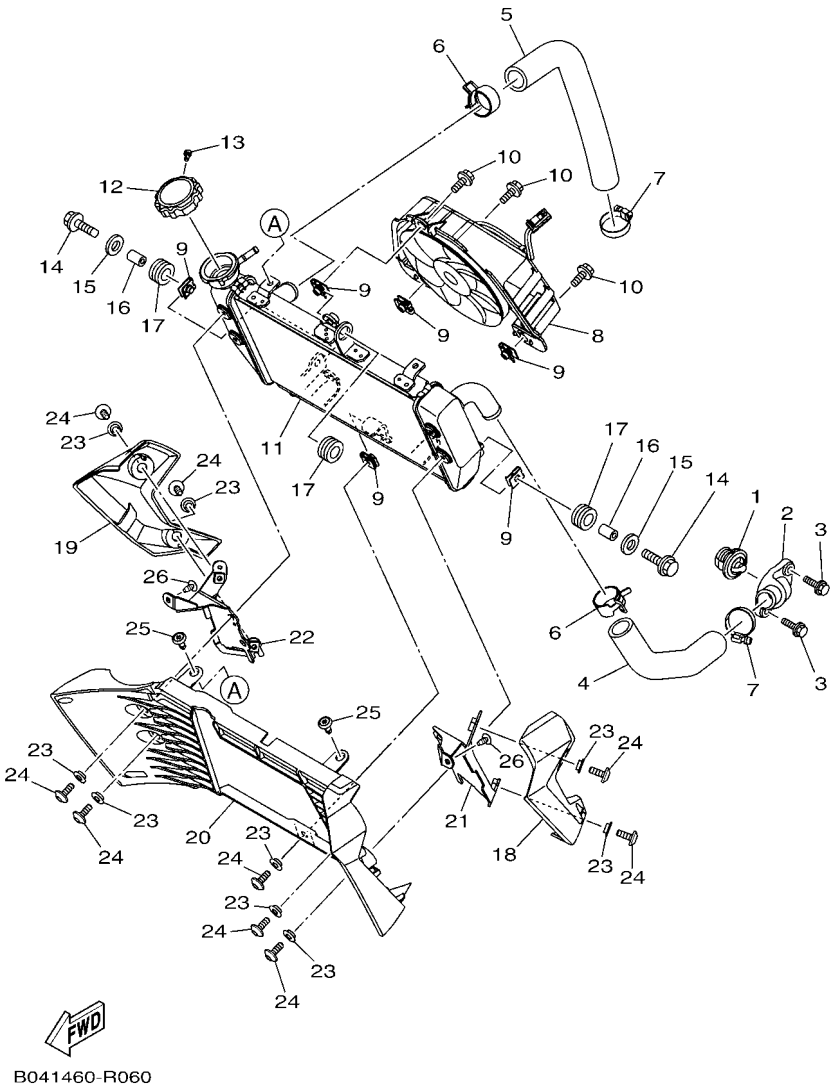


## FIG. 6 MANGUEIRA DO RADIADOR

| REF. NO. | No. PEÇA | DESCRIÇÃO | B091 | | | | | OBSERVAÇÕES |
|---|---|---|---|---|---|---|---|---|
| 1 | 5P0–12411–00 | TERMOSTATO | 1 | | | | | |
| 2 | 1WD–E2413–00 | TAMPA DO TERMOSTATO | 1 | | | | | |
| 3 | 95022–06020 | PARAFUSO FLANGE | 2 | | | | | |
| 4 | 2MS–E2577–00 | MANGUEIRA 2 | 1 | | | | | |
| 5 | 1WD–E2578–00 | MANGUEIRA 3 | 1 | | | | | |
| 6 | 90467–250A1 | PRESILHA | 2 | | | | | |
| 7 | 90450–28001 | BRACADEIRA DO TUBO | 2 | | | | | |
| 8 | 2MS–E2405–00 | VENTOINHA CONJUNTO | 1 | | | | | |
| 9 | 5SL–12671–00 | PORCA 1 | 6 | | | | | |
| 10 | 2S3–12675–00 | PARAFUSO | 3 | | | | | |
| 11 | B04–E2461–00 | RADIADOR CONJUNTO | 1 | | | | | |
| 12 | B04–E2462–10 | TAMPA DO RADIADOR | 1 | | | | | |
| 13 | 97707–30505 | PARAFUSO | 1 | | | | | |
| 14 | 95827–06025 | PARAFUSO FLANGE | 2 | | | | | |
| 15 | 90201–06072 | ARRUELA PLANA | 2 | | | | | |
| 16 | 90387–064W3 | ESPACADOR | 2 | | | | | |
| 17 | 90480–15808 | ILHO DE BORRACHA | 3 | | | | | |
| 18 | B04–F137U–00–P0 | GUIA DE AR 1 | 1 | | | | | MBL2 PARA MS1 |
| | B04–F137U–00–P1 | GUIA DE AR 1 | 1 | | | | | S8 PARA RM7,SMX |
| 19 | B04–F137V–00–P0 | GUIA DE AR 2 | 1 | | | | | MBL2 PARA MS1 |
| | B04–F137V–00–P1 | GUIA DE AR 2 | 1 | | | | | S8 PARA RM7,SMX |
| 20 | B04–F1557–00 | DUTO DE AR | 1 | | | | | |
| 21 | B04–F175T–00 | SUPORTE 1 | 1 | | | | | |
| 22 | B04–F175U–00 | SUPORTE 2 | 1 | | | | | |
| 23 | 90387–06130 | ESPACADOR | 9 | | | | | |
| 24 | 90111–06151 | PARAFUSO HEXAGONAL | 9 | | | | | |
| 25 | 90269–06812 | REBITE | 2 | | | | | |

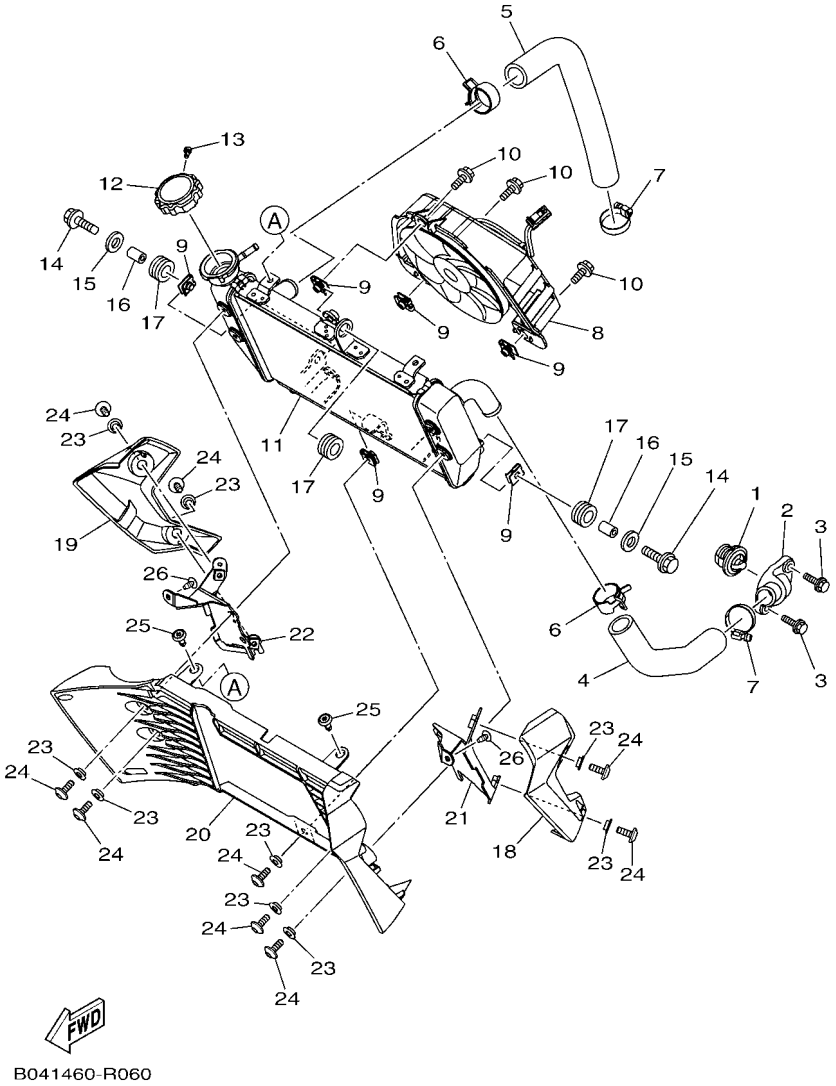


## FIG. 6 MANGUEIRA DO RADIADOR

| REF. NO. | No. PEÇA | DESCRIÇÃO | B091 | | | | | OBSERVAÇÕES |
|---|---|---|---|---|---|---|---|---|
| 26 | 90160–05012 | PARAFUSO | 2 | | | | | |

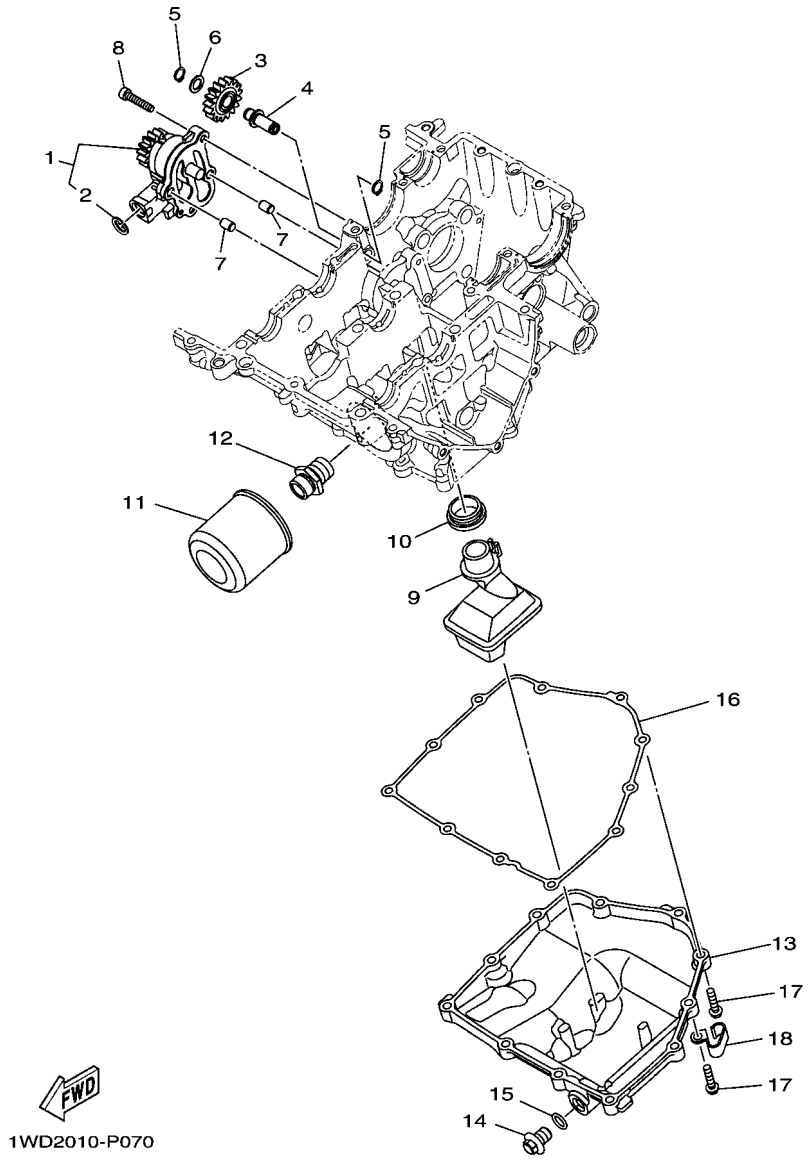


## FIG. 7 BOMBA DE OLEO

| REF. NO. | No. PEÇA | DESCRIÇÃO | B091 | | | | | OBSERVAÇÕES |
|---|---|---|---|---|---|---|---|---|
| 1 | 1WD–E3300–01 | BOMBA DE OLEO COMPLETA | 1 | | | | | |
| 2 | 99009–15500 | .ANEL TRAVA | 1 | | | | | |
| 3 | 1WD–E3341–00 | ENGRENAGEM LOUCA DA BOMBA OLEO | 1 | | | | | |
| 4 | 1WD–E3342–00 | EIXO DA ENGRENAGEM LOUCA | 1 | | | | | |
| 5 | 99009–10400 | ANEL TRAVA | 2 | | | | | |
| 6 | 90201–10119 | ARRUELA PLANA | 1 | | | | | |
| 7 | 99530–08012 | PINO GUIA | 2 | | | | | |
| 8 | 91312–06030 | PARAFUSO HEXAGONAL | 4 | | | | | |
| 9 | 1WD–E3410–00 | CAIXA DO FILTRADOR COMPLETO | 1 | | | | | |
| 10 | 1WD–E3415–00 | VEDACAO DO FILTRADOR DE OLEO | 1 | | | | | |
| 11 | 1WD–E3440–00 | ELEMENTO DO FILTRO DE OLEO CJ | 1 | | | | | |
| 12 | 90401–20008 | PARAFUSO DE UNIAO | 1 | | | | | |
| 13 | 1WD–E3417–00 | TAMPA DO FILTRADOR | 1 | | | | | |
| 14 | 90340–12808 | TAMPAO DO DRENO | 1 | | | | | |
| 15 | 4YS–E1198–00 | GAXETA | 1 | | | | | |
| 16 | 1WD–E3414–00 | GAXETA DA TAMPA DO FILTRADOR | 1 | | | | | |
| 17 | 95022–06025 | PARAFUSO FLANGE | 11 | | | | | |
| 18 | 90462–08810 | BRACADEIRA | 1 | | | | | |

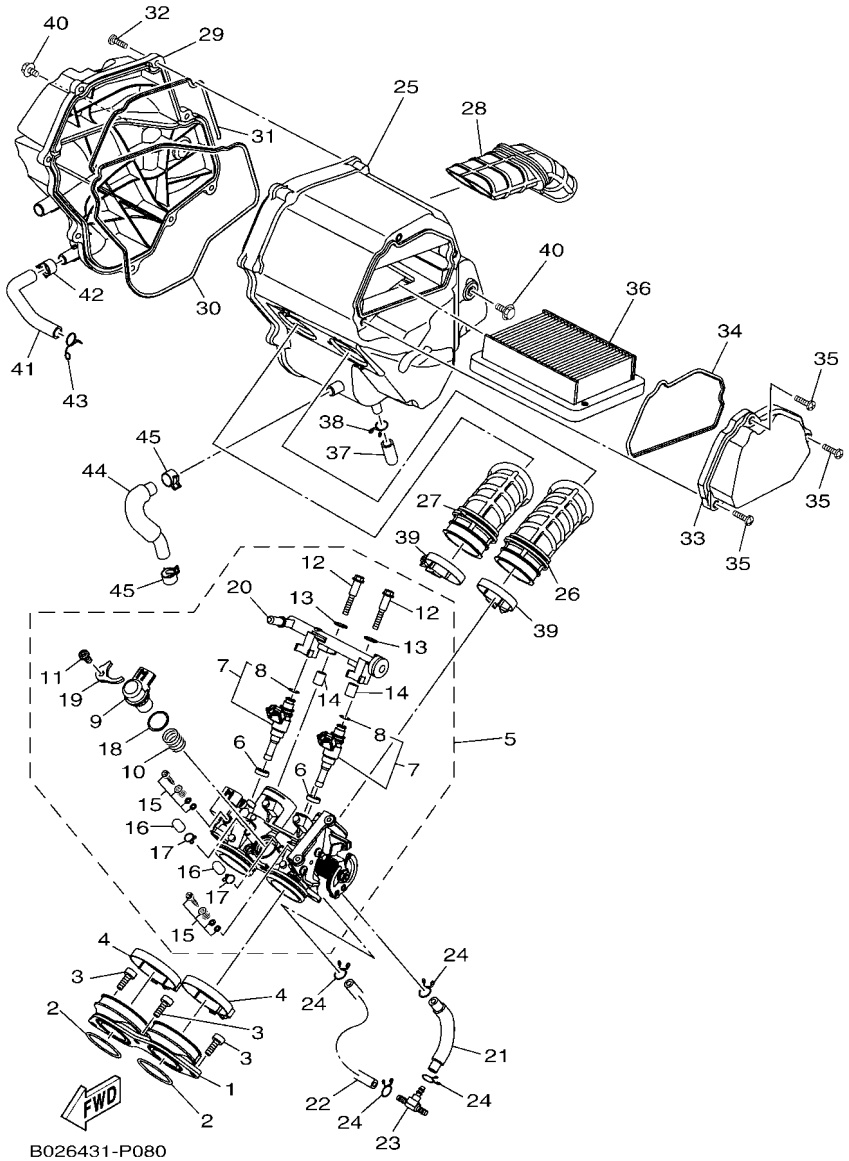


## FIG. 8 ADMISSAO

| REF. NO. | No. PEÇA | DESCRIÇÃO | B091 | | | | | OBSERVAÇÕES |
|---|---|---|---|---|---|---|---|---|
| 1 | 2MS–E3586–00 | JUNCAO DE CARBURACAO 1 | 1 | | | | | |
| 2 | 93210–39802 | ANEL DE BORRACHA | 2 | | | | | |
| 3 | 91312–06016 | PARAFUSO HEXAGONAL | 3 | | | | | |
| 4 | 90450–55804 | BRACADEIRA DO TUBO | 2 | | | | | |
| 5 | 2MS–E3750–00 | CORPO DE ACELERACAO CONJ. | 1 | | | | | |
| 6 | 1WD–E3556–00 | .GAXETA | 2 | | | | | |
| 7 | 1WD–E3761–00 | .INJETOR CONJUNTO | 2 | | | | | |
| 8 | 5PS–14147–00 | ..ANEL DE BORRACHA | 2 | | | | | |
| 9 | 1WS–85801–00 | .SENSOR DO PASSO DO MOTOR | 1 | | | | | |
| 10 | 1WS–14335–00 | .MOLA | 1 | | | | | |
| 11 | 98502–06012 | .PARAFUSO | 1 | | | | | |
| 12 | 1WD–E3573–00 | .PARAFUSO 1 | 2 | | | | | |
| 13 | 8GL–13571–00 | .ARRUELA | 2 | | | | | |
| 14 | 8HG–14534–00 | .ESPACADOR | 2 | | | | | |
| 15 | 5JW–14104–00 | .JOGO DO PARAFUSO DO AR | 2 | | | | | |
| 16 | 895–14169–00 | .CAPA DE PROTECAO | 2 | | | | | |
| 17 | 8A7–14139–00 | .PRESILHA DO TUBO | 2 | | | | | |
| 18 | 54P–E416A–00 | .ANEL DE BORRACHA | 1 | | | | | |
| 19 | 1WD–E4243–00 | .PLACA DE FIXACAO | 1 | | | | | |
| 20 | 1WD–E3938–00 | .TUBO | 1 | | | | | |
| 21 | 2MS–E4465–00 | TUBO | 1 | | | | | |
| 22 | 2MS–E4466–00 | TUBO | 1 | | | | | |
| 23 | 90413–06031 | CONECTOR 3 | 1 | | | | | |
| 24 | 90467–090A2 | PRESILHA | 4 | | | | | |
| 25 | 1WD–E4411–00 | CAIXA DO FILTRO DE AR 1 | 1 | | | | | |
| 26 | 2MS–E4469–00 | FUNIL DO AR | 1 | | | | | |
| 27 | 2MS–E446C–00 | FUNIL 2 | 1 | | | | | |

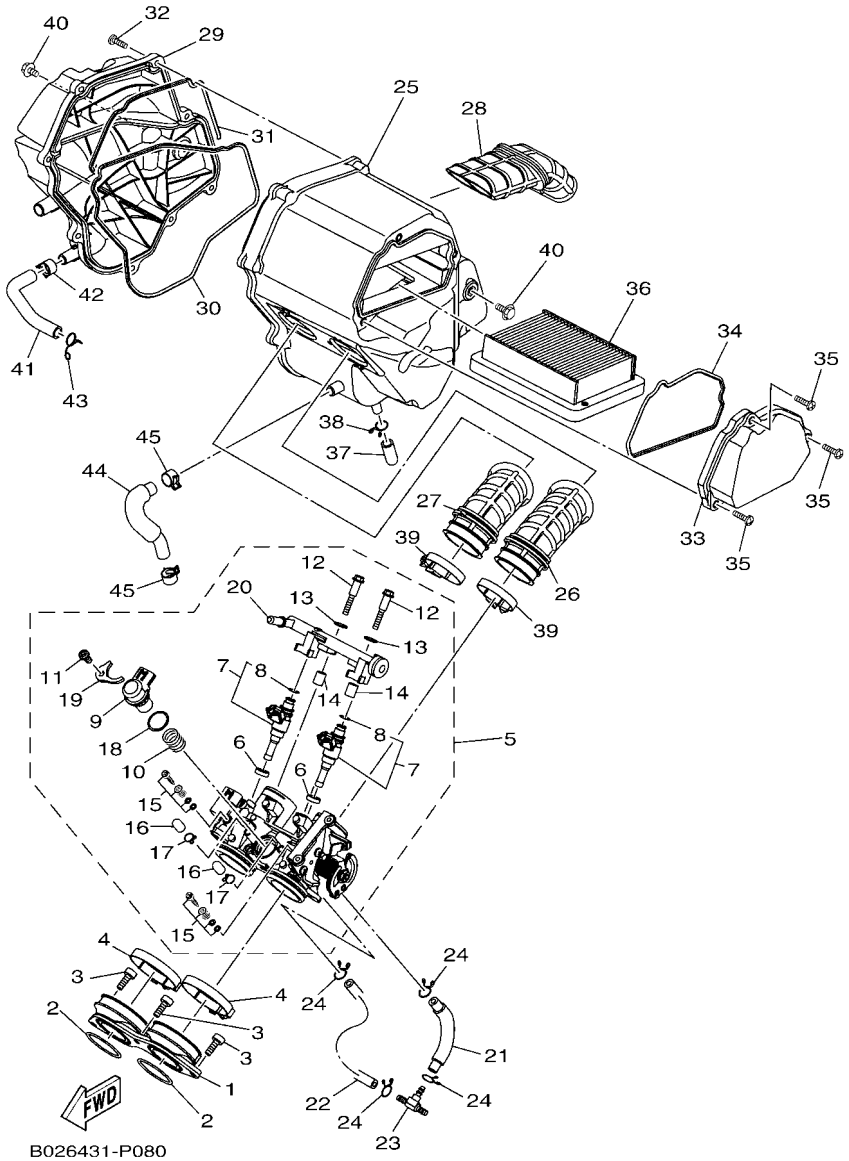


## FIG. 8 ADMISSAO

| REF. NO. | No. PEÇA | DESCRIÇÃO | B091 | | | | | OBSERVAÇÕES |
|---|---|---|---|---|---|---|---|---|
| 28 | 1WD–E4437–00 | DUTO | 1 | | | | | |
| 29 | 2MS–E4412–00 | TAMPA DA CAIXA DO FILTRO 1 | 1 | | | | | |
| 30 | 1WD–E4452–00 | VEDACAO | 1 | | | | | |
| 31 | 1WD–E4457–00 | VEDACAO | 1 | | | | | |
| 32 | 97702–50025 | PARAFUSO | 8 | | | | | |
| 33 | 1WD–E4422–00 | TAMPA DA CAIXA DO FILTRO 2 | 1 | | | | | |
| 34 | 1WD–E4462–00 | VEDACAO | 1 | | | | | |
| 35 | 98902–05020 | PARAFUSO | 3 | | | | | |
| 36 | 1WD–E4451–00 | ELEMENTO DO FILTRO DE AR | 1 | | | | | |
| 37 | 52B–E443E–00 | TUBO DE DRENO | 1 | | | | | |
| 38 | 90467–110A3 | PRESILHA | 1 | | | | | |
| 39 | 54P–E3474–00 | BRACADEIRA | 2 | | | | | |
| 40 | 95822–06010 | PARAFUSO FLANGE | 2 | | | | | |
| 41 | 1WD–E3543–01 | TUBO DE AR | 1 | | | | | |
| 42 | 90467–13802 | PRESILHA | 1 | | | | | |
| 43 | 90467–12052 | PRESILHA | 1 | | | | | |
| 44 | 2MS–E5373–01 | TUBO DO RESPIRO | 1 | | | | | |
| 45 | 90467–13802 | PRESILHA | 2 | | | | | |

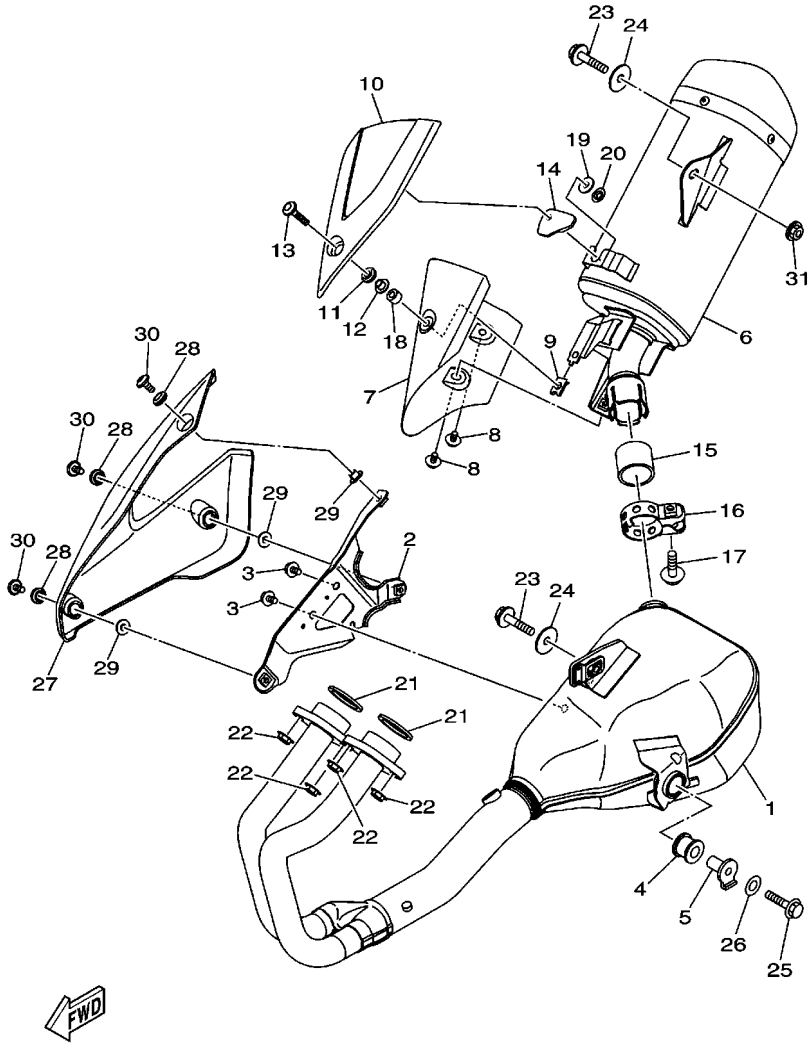


## FIG. 9 ESCAPAMENTO

| REF. NO. | No. PEÇA | DESCRIÇÃO | B091 | | | | | OBSERVAÇÕES |
|---|---|---|---|---|---|---|---|---|
| 1 | B02–E4602–00 | TUBO DE ESCAPE COMPLETO | 1 | | | | | |
| 2 | 1WD–E473L–00 | SUPORTE 3-1 | 1 | | | | | |
| 3 | 95027–06010 | PARAFUSO FLANGE | 2 | | | | | |
| 4 | 5TP–E4747–00 | AMORTIZADOR DO SILENCIADOR | 1 | | | | | |
| 5 | 1WD–E4775–00 | PORCA | 1 | | | | | |
| 6 | B01–E4703–00 | SILENCIADOR COMPLETO 1 | 1 | | | | | |
| 7 | 1WD–E4758–00 | PROTETOR DO SILENCIADOR | 1 | | | | | |
| 8 | 90111–06802 | PARAFUSO | 2 | | | | | |
| 9 | 90183–06818 | PORCA MOLA | 1 | | | | | |
| 10 | 1WD–E4728–00 | PROTETOR DO SILENCIADOR 2 | 1 | | | | | |
| 11 | 90480–12581 | ILHO DE BORRACHA | 1 | | | | | |
| 12 | 90387–087L0 | ESPACADOR | 1 | | | | | |
| 13 | 90111–06847 | PARAFUSO | 1 | | | | | |
| 14 | 1WD–E4763–00 | ESPACADOR | 1 | | | | | |
| 15 | 54D–E4714–00 | GAXETA DO SILENCIADOR | 1 | | | | | |
| 16 | 1WD–E4715–00 | CINTA DO SILENCIADOR | 1 | | | | | |
| 17 | 95027–08035 | PARAFUSO FLANGE | 1 | | | | | |
| 18 | 90387–068N4 | ESPACADOR | 1 | | | | | |
| 19 | 90201–06088 | ARRUELA PLANA | 1 | | | | | |
| 20 | 90183–06011 | PORCA MOLA | 1 | | | | | |
| 21 | 1WD–E4613–00 | GAXETA DO TUBO DE ESCAPE | 2 | | | | | |
| 22 | 95707–08500 | PORCA FLANGE | 4 | | | | | |
| 23 | 90105–088G7 | PARAFUSO FLANGE | 2 | | | | | |
| 24 | 90201–08612 | ARRUELA PLANA | 2 | | | | | |
| 25 | 95817–08030 | PARAFUSO FLANGE | 1 | | | | | |
| 26 | 90201–087F0 | ARRUELA PLANA | 1 | | | | | |
| 27 | 1WD–E4628–00 | PROTETOR DO TUBO DE ESCAPE | 1 | | | | | |

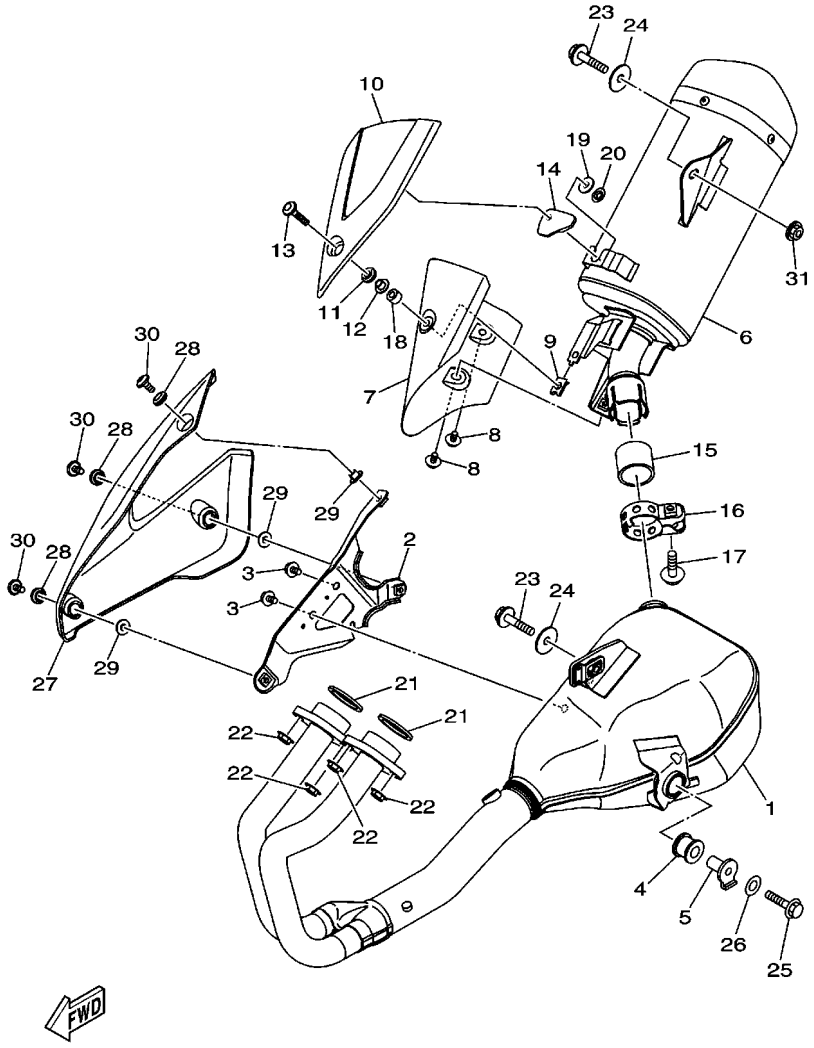


## FIG. 9 ESCAPAMENTO

| REF. NO. | No. PEÇA | DESCRIÇÃO | B091 | | | | | OBSERVAÇÕES |
|---|---|---|---|---|---|---|---|---|
| 28 | 90480–12581 | ILHO DE BORRACHA | 3 | | | | | |
| 29 | 90387–087L0 | ESPACADOR | 3 | | | | | |
| 30 | 90111–06152 | PARAFUSO | 3 | | | | | |
| 31 | 95607–08200 | PORCA AUTOTRAVANTE | 1 | | | | | |

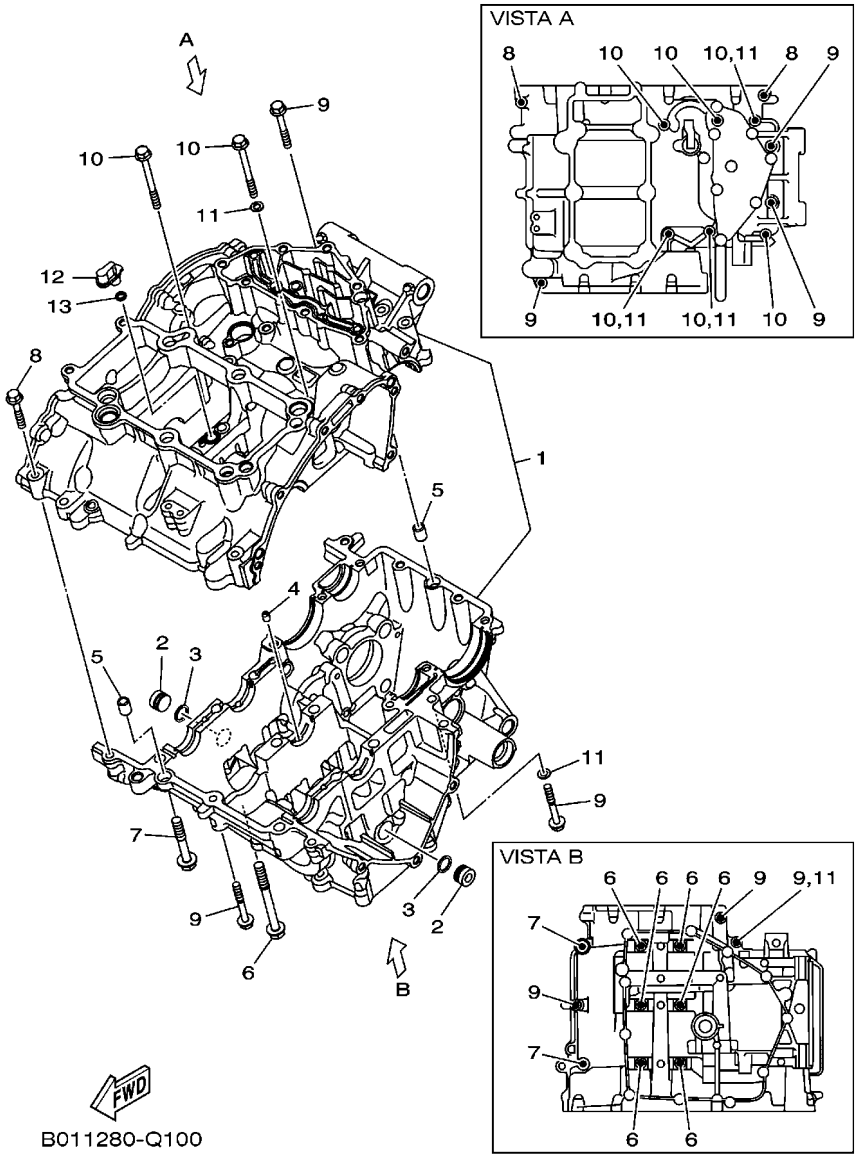


## FIG. 10 CARCACA DO MOTOR

| REF. NO. | No. PEÇA | DESCRIÇÃO | B091 | | | | | OBSERVAÇÕES |
|---|---|---|---|---|---|---|---|---|
| 1 | 1WD–E5150–20 | CARCACA DO MOTOR COMPLETA | 1 | | | | | |
| 2 | 90338–16262 | TAMPAO | 2 | | | | | |
| 3 | 93210–12803 | ANEL DE BORRACHA | 2 | | | | | |
| 4 | 1WD–E5148–00 | PULVERIZADOR 2 | 1 | | | | | |
| 5 | 99530–10014 | PINO GUIA | 2 | | | | | |
| 6 | 90105–088F7 | PARAFUSO FLANGE | 6 | | | | | |
| 7 | 90105–088G0 | PARAFUSO FLANGE | 2 | | | | | |
| 8 | 95812–06035 | PARAFUSO FLANGE | 2 | | | | | |
| 9 | 95812–06045 | PARAFUSO FLANGE | 6 | | | | | |
| 10 | 95812–06065 | PARAFUSO FLANGE | 6 | | | | | |
| 11 | 90430–06014 | GAXETA | 4 | | | | | |
| 12 | 1WD–E5155–00 | PULVERIZADOR 3 | 1 | | | | | |
| 13 | 93210–068F7 | ANEL DE BORRACHA | 1 | | | | | |

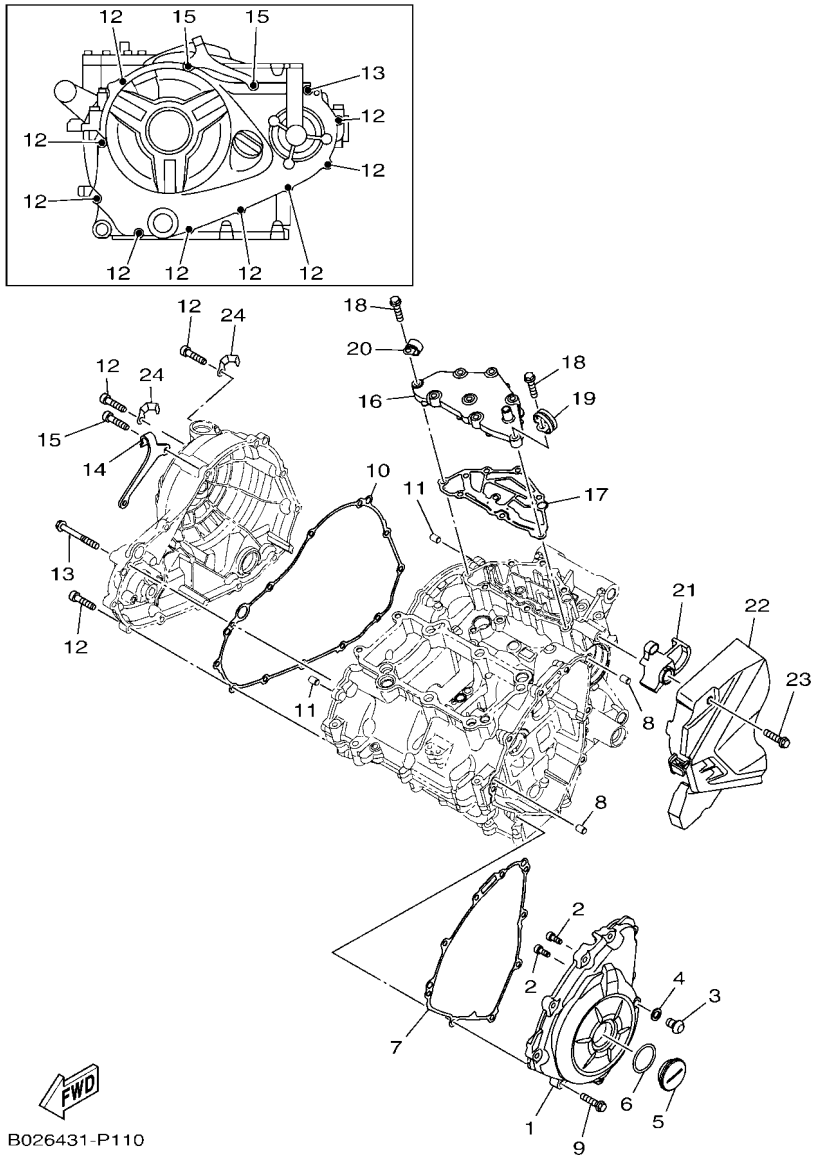


## FIG. 11 TAMPA DA CARCACA 1

| REF. NO. | No. PEÇA | DESCRIÇÃO | B091 | | | | | OBSERVAÇÕES |
|---|---|---|---|---|---|---|---|---|
| 1 | 1WD–E5411–00 | TAMPA DA CARCACA 1 | 1 | | | | | |
| 2 | 91312–05012 | PARAFUSO HEXAGONAL | 2 | | | | | |
| 3 | 92014–08012 | PARAFUSO | 1 | | | | | |
| 4 | 90430–08143 | GAXETA | 1 | | | | | |
| 5 | 90340–32819 | TAMPAO DO DRENO | 1 | | | | | |
| 6 | 93210–32816 | ANEL DE BORRACHA | 1 | | | | | |
| 7 | 1WD–E5451–00 | GAXETA DA TAMPA DA CARCACA 1 | 1 | | | | | |
| 8 | 99530–08012 | PINO GUIA | 2 | | | | | |
| 9 | 95022–06025 | PARAFUSO FLANGE | 9 | | | | | |
| 10 | 1WD–E5461–00 | GAXETA DA TAMPA DA CARCACA 2 | 1 | | | | | |
| 11 | 99530–08012 | PINO GUIA | 2 | | | | | |
| 12 | 95022–06025 | PARAFUSO FLANGE | 9 | | | | | |
| 13 | 95022–06050 | PARAFUSO FLANGE | 1 | | | | | |
| 14 | 2MS–E5441–00 | FIXADOR DO CABO DA EMBREAGEM | 1 | | | | | |
| 15 | 91312–06025 | PARAFUSO HEXAGONAL INTERNO | 2 | | | | | |
| 16 | 1WD–E5413–10 | CAPA | 1 | | | | | |
| 17 | 1WD–E5462–00 | GAXETA DA TAMPA DA CARCACA 3 | 1 | | | | | |
| 18 | 95022–06025 | PARAFUSO FLANGE | 8 | | | | | |
| 19 | 90462–08812 | BRACADEIRA | 1 | | | | | |
| 20 | 90462–08806 | BRACADEIRA | 1 | | | | | |
| 21 | 1WD–E5377–00 | GUIA DA ENTRADA | 1 | | | | | |
| 22 | 1WD–E5418–00 | TAMPA DA CAIXA DA CORRENTE | 1 | | | | | |
| 23 | 95022–06025 | PARAFUSO FLANGE | 2 | | | | | |
| 24 | 90462–08225 | BRACADEIRA | 2 | | | | | |

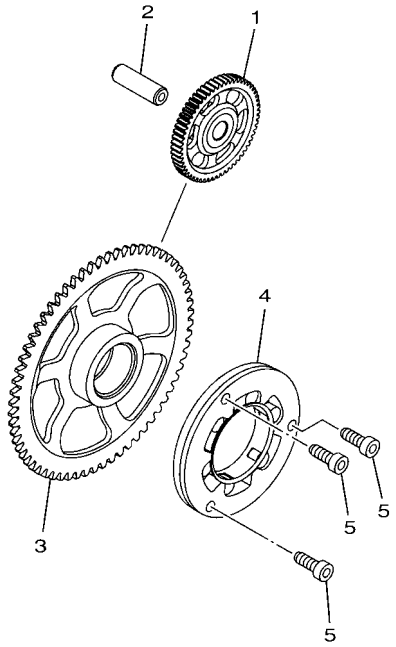

1WD1460-P120

## FIG. 12 EMBREAGEM DA PARTIDA

| REF. NO. | No. PEÇA | DESCRIÇÃO | B091 | | | | | OBSERVAÇÕES |
|---|---|---|---|---|---|---|---|---|
| 1 | 1WD–E5514–00 | ENGRENAGEM 2 | 1 | | | | | |
| 2 | 44D–E5521–00 | EIXO 1 | 1 | | | | | |
| 3 | 1WD–E5515–00 | ENGRENAGEM 3 | 1 | | | | | |
| 4 | 1WD–E5580–00 | EMBREAGEM DE PARTIDA EXTERNA | 1 | | | | | |
| 5 | 90110–06161 | PARAFUSO HEXAGONAL INTERNO | 3 | | | | | |

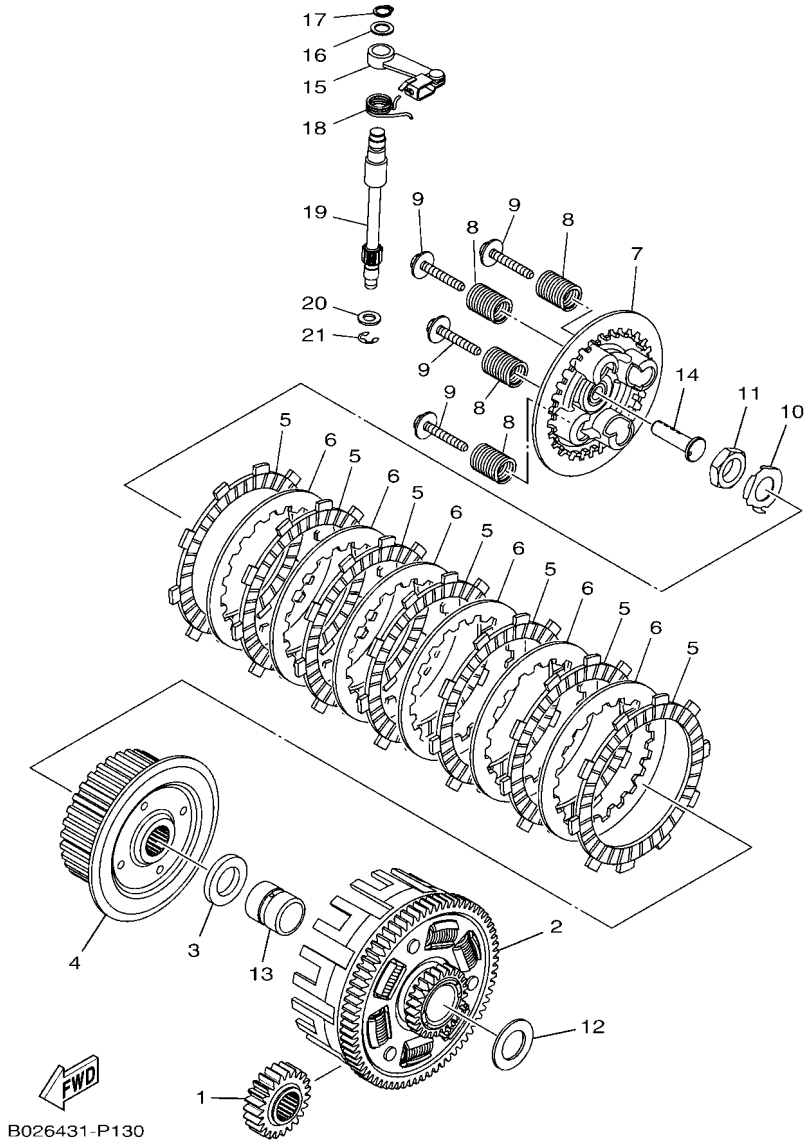


## FIG. 13 EMBREAGEM

| REF. NO. | No. PEÇA | DESCRIÇÃO | B091 | | | | | OBSERVAÇÕES |
|---|---|---|---|---|---|---|---|---|
| 1 | 1WD–E6111–00 | ENGRENAGEM MOTORA PRIMARIA | 1 | | | | | |
| 2 | 2MS–E6150–00 | ENGRENAGEM MOVIDA COMPLETA | 1 | | | | | |
| 3 | 1WD–E6154–00 | PLACA DE ENCOSTO 1 | 1 | | | | | |
| 4 | 2MS–E6371–00 | CUBO DE EMBREAGEM | 1 | | | | | |
| 5 | 1WD–E6331–00 | PLACA DE FRICCAO 2 | 7 | | | | | |
| 6 | 1WD–E6324–00 | PLACA DE EMBREAGEM 1 | 6 | | | | | |
| 7 | 2MS–E6350–01 | PLACA DE PRESSAO CONJUNTO | 1 | | | | | |
| 8 | 2MS–E6333–10 | MOLA DA EMBREAGEM | 4 | | | | | |
| 9 | 1WD–E6337–00 | PARAFUSO DE FIXACAO DA MOLA | 4 | | | | | |
| 10 | 90215–18800 | ARRUELA TRAVA | 1 | | | | | |
| 11 | 90170–18221 | PORCA | 1 | | | | | |
| 12 | 90201–22013 | ARRUELA PLANA | 1 | | | | | |
| 13 | 1WD–E6181–00 | ESPACADOR 1 | 1 | | | | | |
| 14 | 1WD–E6356–00 | HASTE IMPULSORA 1 | 1 | | | | | |
| 15 | 2MS–E6340–00 | ALAVANCA IMPULSORA COMPLETA | 1 | | | | | |
| 16 | 90201–10843 | ARRUELA PLANA | 1 | | | | | |
| 17 | 99009–10400 | ANEL TRAVA | 1 | | | | | |
| 18 | 90508–18136 | MOLA DE TORCAO | 1 | | | | | |
| 19 | 1WD–16382–00 | EIXO DA ALAVANCA IMPULSORA | 1 | | | | | |
| 20 | 92902–08600 | ARRUELA PLANA | 1 | | | | | |
| 21 | 99002–07600 | ANEL TRAVA | 1 | | | | | |

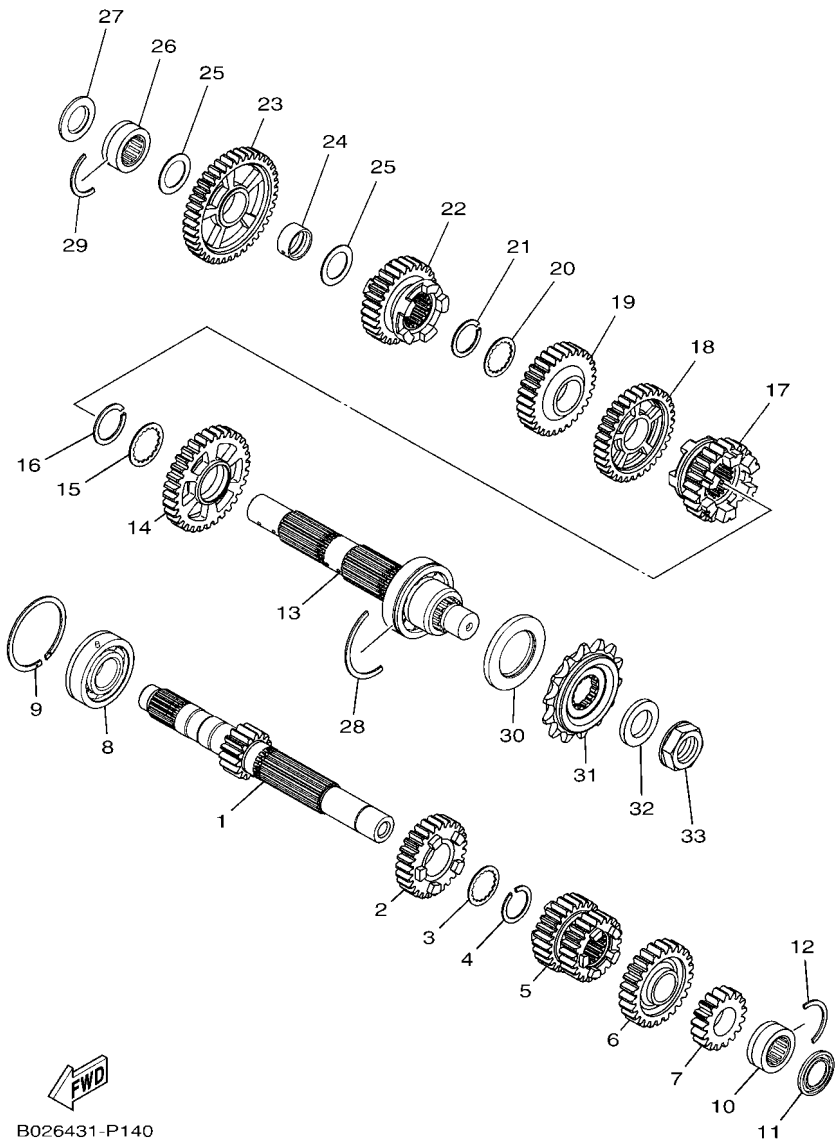


## FIG. 14 TRANSMISSAO

| REF. NO. | No. PEÇA | DESCRIÇÃO | B091 | | | | | OBSERVAÇÕES |
|---|---|---|---|---|---|---|---|---|
| 1 | 2MS–E7411–00 | EIXO PRINCIPAL (14D) | 1 | | | | | |
| 2 | 2MS–E7151–00 | ENGRENAGEM MOTORA 5A (25D) | 1 | | | | | |
| 3 | 90214–22008 | ARRUELA TRAVA | 1 | | | | | |
| 4 | 93440–24200 | ANEL TRAVA | 1 | | | | | |
| 5 | 2MS–E7131–00 | ENGRENAGEM MOTORA 3A (23D/23D) | 1 | | | | | |
| 6 | 2MS–E7161–00 | ENGRENAGEM MOTORA 6A (30D) | 1 | | | | | |
| 7 | 2MS–E7121–00 | ENGRENAGEM MOTORA 2A (17D) | 1 | | | | | |
| 8 | 93306–255Y9 | ROLAMENTO | 1 | | | | | |
| 9 | 93440–52009 | ANEL TRAVA | 1 | | | | | |
| 10 | 93311–420Y3 | ROLAMENTO | 1 | | | | | |
| 11 | 93101–20802 | RETENTOR DE OLEO | 1 | | | | | |
| 12 | 278–17425–00 | ANEL TRAVA 2 | 1 | | | | | |
| 13 | 1WD–E7402–00 | EIXO SECUNDARIO | 1 | | | | | |
| 14 | 2MS–E7221–00 | ENGRENAGEM MOVIDA DA 2A (31D) | 1 | | | | | |
| 15 | 90209–25011 | ARRUELA | 1 | | | | | |
| 16 | 93440–28184 | ANEL TRAVA | 1 | | | | | |
| 17 | 2MS–E7261–00 | ENGRENAGEM MOVIDA 6A (24D) | 1 | | | | | |
| 18 | 2MS–E7231–00 | ENGRENAGEM MOVIDA 3A (31D) | 1 | | | | | |
| 19 | 2MS–E7241–00 | ENGRENAGEM MOVIDA 4A (25D) | 1 | | | | | |
| 20 | 90214–22008 | ARRUELA TRAVA | 1 | | | | | |
| 21 | 93440–24200 | ANEL TRAVA | 1 | | | | | |
| 22 | 2MS–E7251–00 | ENGRENAGEM MOVIDA 5A (23D) | 1 | | | | | |
| 23 | 2MS–E7211–00 | ENGRENAGEM MOVIDA DA 1A (35D) | 1 | | | | | |
| 24 | 90387–20814 | ESPACADOR | 1 | | | | | |
| 25 | 90201–20276 | ARRUELA PLANA ( 1.0T) | 2 | | | | | |
| 26 | 93311–420Y3 | ROLAMENTO | 1 | | | | | |
| 27 | 93101–20802 | RETENTOR DE OLEO | 1 | | | | | |

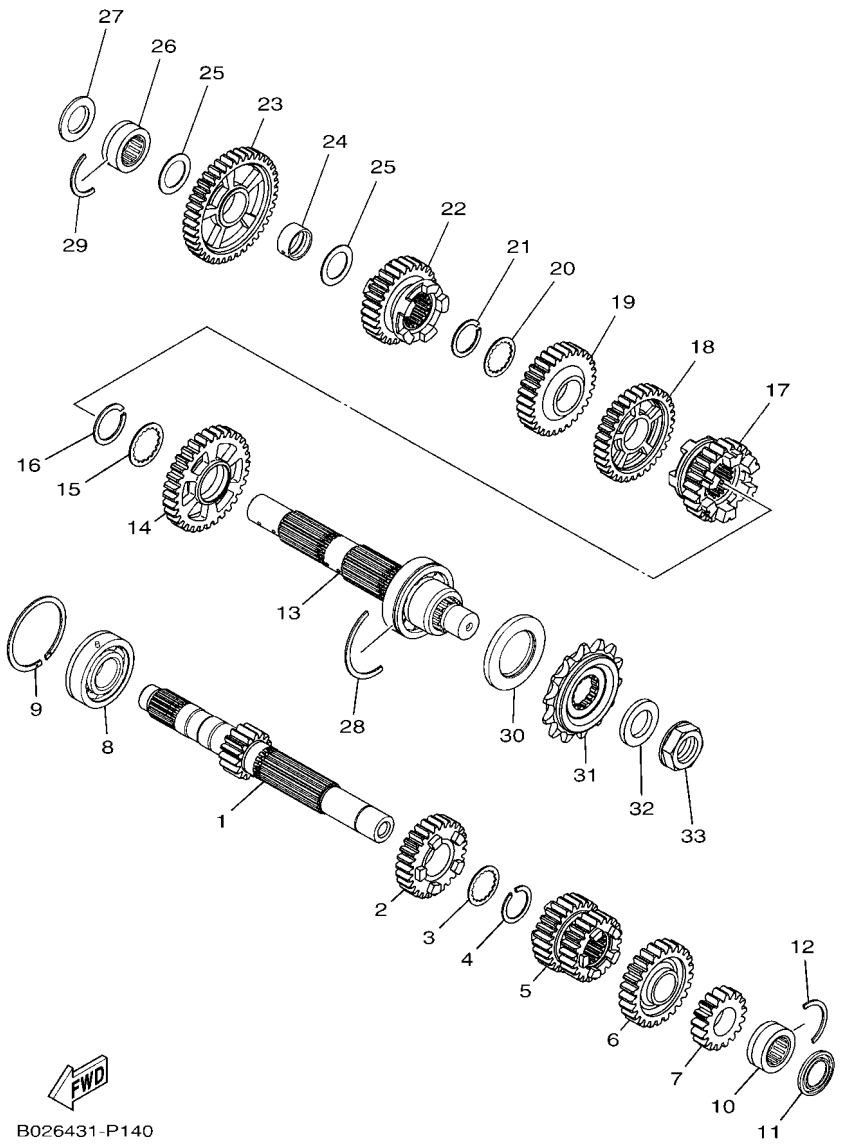


## FIG. 14 TRANSMISSAO

| REF. NO. | No. PEÇA | DESCRIÇÃO | B091 | | | | | OBSERVAÇÕES |
|---|---|---|---|---|---|---|---|---|
| 28 | 1WD–17424–00 | ANEL TRAVA 1 | 1 | | | | | |
| 29 | 278–17425–00 | ANEL TRAVA 2 | 1 | | | | | |
| 30 | 93102–35803 | RETENTOR DE OLEO | 1 | | | | | |
| 31 | 1WD–E7460–00 | PINHAO DE TRANSMISSAO (14D) | 1 | | | | | |
| 32 | 90201–20023 | ARRUELA PLANA | 1 | | | | | |
| 33 | 90179–20013 | PORCA | 1 | | | | | |

## FIG. 15 EIXO TRAMBULADOR

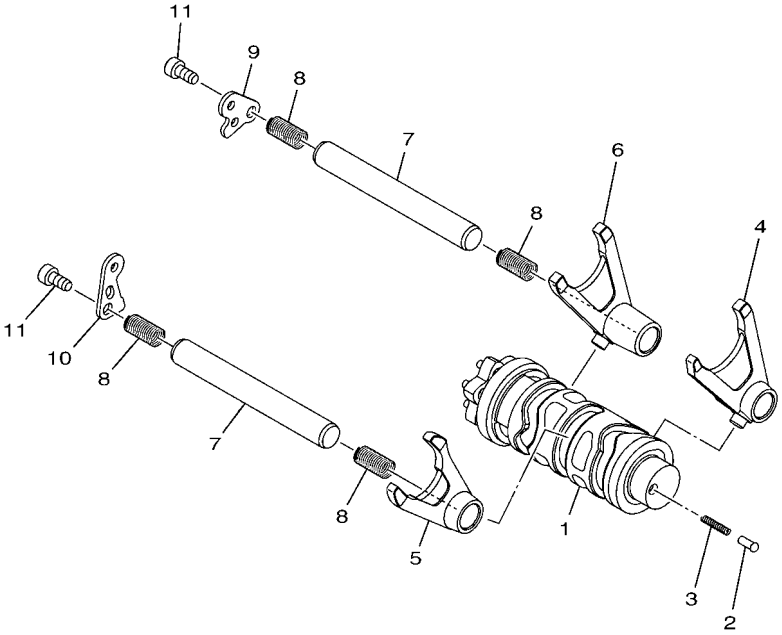

1WD1460-P150

| REF. NO. | No. PEÇA | DESCRIÇÃO | B091 | | | | | OBSERVAÇÕES |
|---|---|---|---|---|---|---|---|---|
| 1 | 1WD–E8540–10 | CAME DE MUDANCA COMPLETO | 1 | | | | | |
| 2 | 5TP–E8542–00 | PONTO NEUTRO | 1 | | | | | |
| 3 | 90501–06022 | MOLA DE COMPRESSAO | 1 | | | | | |
| 4 | 1WD–E8511–00 | GARFO DE MUDANCA 1 | 1 | | | | | |
| 5 | 1WD–E8512–00 | GARFO DE MUDANCA 2 | 1 | | | | | |
| 6 | 1WD–E8513–00 | GARFO DE MUDANCA 3 | 1 | | | | | |
| 7 | 1WD–E8531–00 | BARRA GUIA DO GARFO 1 | 2 | | | | | |
| 8 | 90501–080A2 | MOLA DE COMPRESSAO | 4 | | | | | |
| 9 | 1WD–E8536–00 | LIMITADOR DA ALAVANCA SELETORA | 1 | | | | | |
| 10 | 1WD–E8562–00 | PLACA LIMITADORA 2 | 1 | | | | | |
| 11 | 90110–06182 | PARAFUSO HEXAGONAL INTERNO | 2 | | | | | |

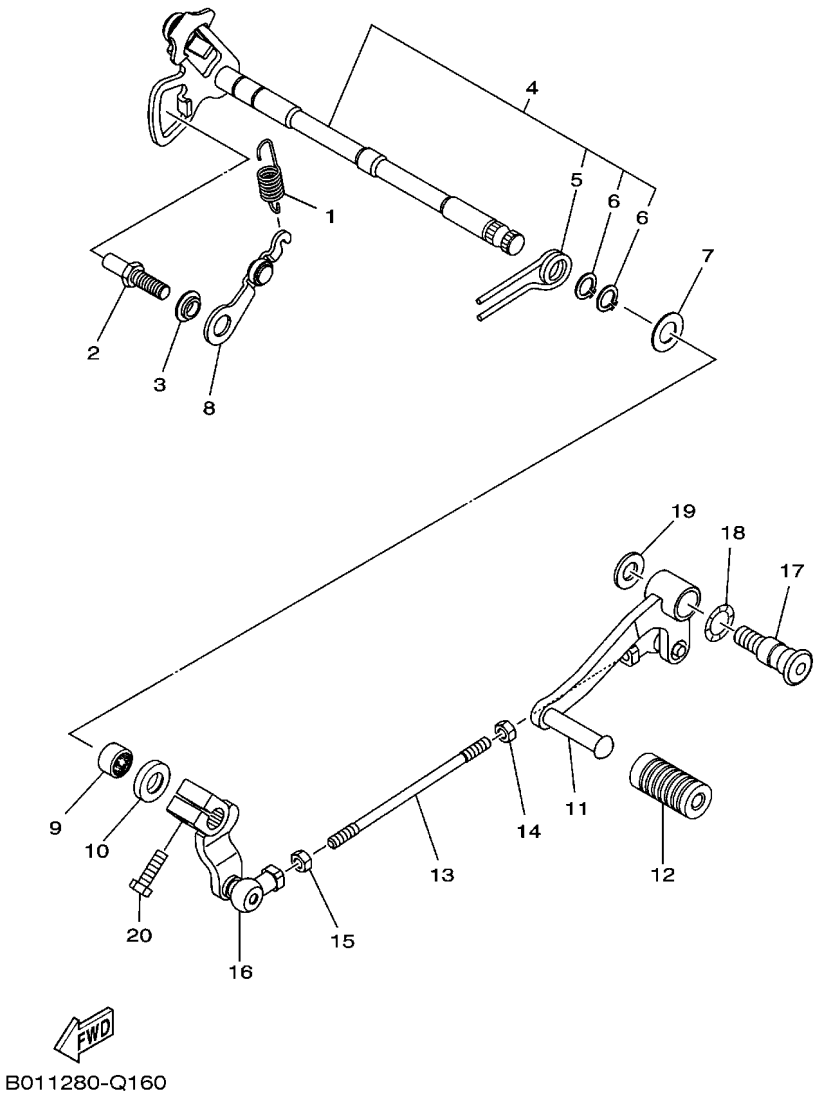


## FIG. 16 EIXO DE MUDANCA

| REF. NO. | No. PEÇA | DESCRIÇÃO | B091 | | | | | OBSERVAÇÕES |
|---|---|---|---|---|---|---|---|---|
| 1 | 1WD–E8337–00 | MOLA | 1 | | | | | |
| 2 | 1WD–E8127–00 | PARAFUSO LIMITADOR | 1 | | | | | |
| 3 | 1WD–E8175–00 | ESPACADOR | 1 | | | | | |
| 4 | 1WD–E8101–00 | EIXO DE MUDANCA CONJ. | 1 | | | | | |
| 5 | 90508–29806 | .MOLA DE TORCAO | 1 | | | | | |
| 6 | 99009–12400 | .ANEL TRAVA | 2 | | | | | |
| 7 | 90201–127E1 | ARRUELA PLANA | 1 | | | | | |
| 8 | 1WD–E8140–00 | ALAVANCA LIMITADORA CONJ. | 1 | | | | | |
| 9 | 93317–11295 | ROLAMENTO | 1 | | | | | |
| 10 | 93102–12891 | RETENTOR DE OLEO | 1 | | | | | |
| 11 | B01–E8111–00 | PEDAL DE CAMBIO | 1 | | | | | |
| 12 | 44C–E8113–00 | CAPA DO PEDAL | 1 | | | | | |
| 13 | 1WD–E8115–00 | HASTE DO CAMBIO | 1 | | | | | |
| 14 | 90170–06023 | PORCA | 1 | | | | | |
| 15 | 95302–06600 | PORCA | 1 | | | | | |
| 16 | 1WD–E8112–00 | BRACO DO CAMBIO | 1 | | | | | |
| 17 | 45P–F7261–00 | EIXO | 1 | | | | | |
| 18 | 90206–14001 | ARRUELA ONDULADA | 1 | | | | | |
| 19 | 90201–10021 | ARRUELA PLANA | 1 | | | | | |
| 20 | 97012–06020 | PARAFUSO | 1 | | | | | |

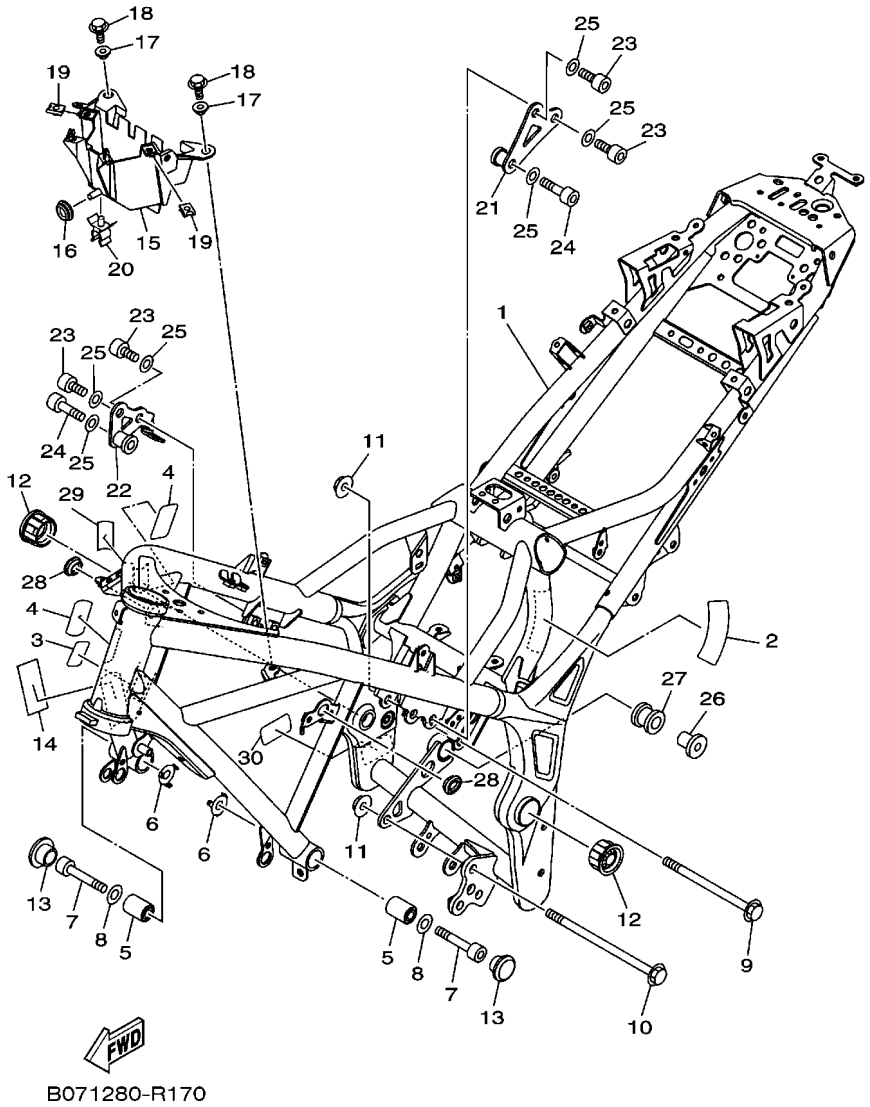


## FIG. 17 CHASSI

| REF. NO. | No. PEÇA | DESCRIÇÃO | B091 | | | | | OBSERVAÇÕES |
|---|---|---|---|---|---|---|---|---|
| 1 | B04–F1110–00–P0 | QUADRO COMPLETO | 1 | | | | | DPBM15 PARA MS1 |
| | B04–F1110–00–P1 | QUADRO COMPLETO | 1 | | | | | MBL2 P/ RM7,SMX |
| 2 | 1WD–F1652–00 | PROTETOR | 1 | | | | | |
| 3 | 1WD–F193A–00 | PROTETOR | 1 | | | | | |
| 4 | 5D9–F414G–00 | VEDACAO | 2 | | | | | |
| 5 | 90388–10816 | AMORTIZADOR | 2 | | | | | |
| 6 | 1WD–F191B–00 | PLACA 1 | 2 | | | | | |
| 7 | 91317–10060 | PARAFUSO | 2 | | | | | |
| 8 | 92902–10200 | ARRUELA | 2 | | | | | |
| 9 | 90105–10889 | PARAFUSO FLANGE | 1 | | | | | |
| 10 | 90105–10891 | PARAFUSO FLANGE | 1 | | | | | |
| 11 | 90179–10805 | PORCA | 2 | | | | | |
| 12 | 1WD–F135F–00 | TAMPA | 2 | | | | | |
| 13 | 90338–23801 | TAMPAO | 2 | | | | | |
| 14 | B04–F414G–00 | VEDACAO | 1 | | | | | |
| 15 | 1WD–F1171–00 | CAIXA | 1 | | | | | |
| 16 | 90480–13398 | ILHO DE BORRACHA | 1 | | | | | |
| 17 | 90387–07819 | ESPACADOR | 2 | | | | | |
| 18 | 95022–06014 | PARAFUSO FLANGE | 2 | | | | | |
| 19 | 90183–06818 | PORCA MOLA | 2 | | | | | |
| 20 | 90464–12015 | BRACADEIRA | 1 | | | | | |
| 21 | 1WD–F122A–00 | SUPORTE 1 | 1 | | | | | |
| 22 | B04–F122B–00 | SUPORTE 2 | 1 | | | | | |
| 23 | 91317–10020 | PARAFUSO | 4 | | | | | |
| 24 | 91317–10045 | PARAFUSO | 2 | | | | | |
| 25 | 92907–10600 | ARRUELA PLANA | 6 | | | | | |
| 26 | 90387–08813 | ESPACADOR | 1 | | | | | |

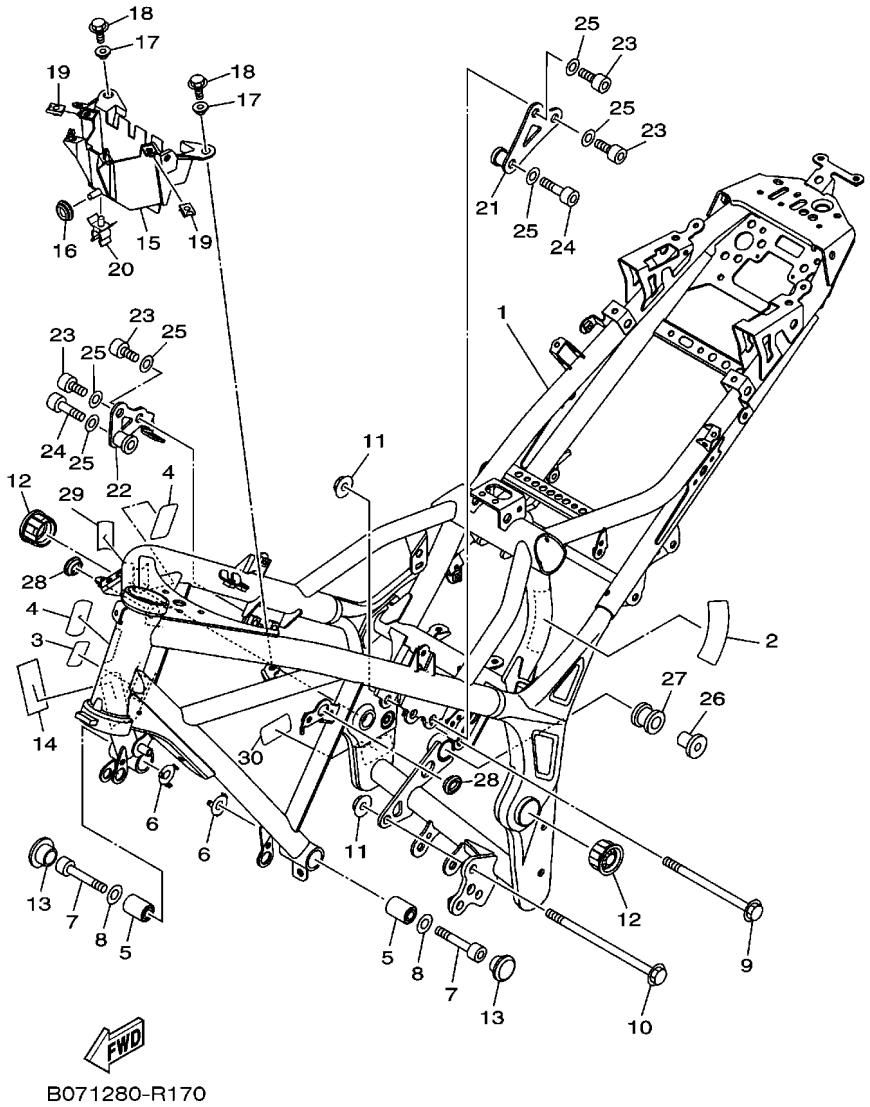


## FIG. 17 CHASSI

| REF. NO. | No. PEÇA | DESCRIÇÃO | B091 | | | | | OBSERVAÇÕES |
|---|---|---|---|---|---|---|---|---|
| 27 | 5TP–E4747–00 | AMORTIZADOR DO SILENCIADOR | 1 | | | | | |
| 28 | 90480–01558 | ILHO DE BORRACHA | 2 | | | | | |
| 29 | 4VW–F111M–04 | ETIQUETA DE FABRICACAO LOCAL | 1 | | | | | |
| 30 | 5HH–F178A–00 | ETIQUETA YAMALUBE | 1 | | | | | |

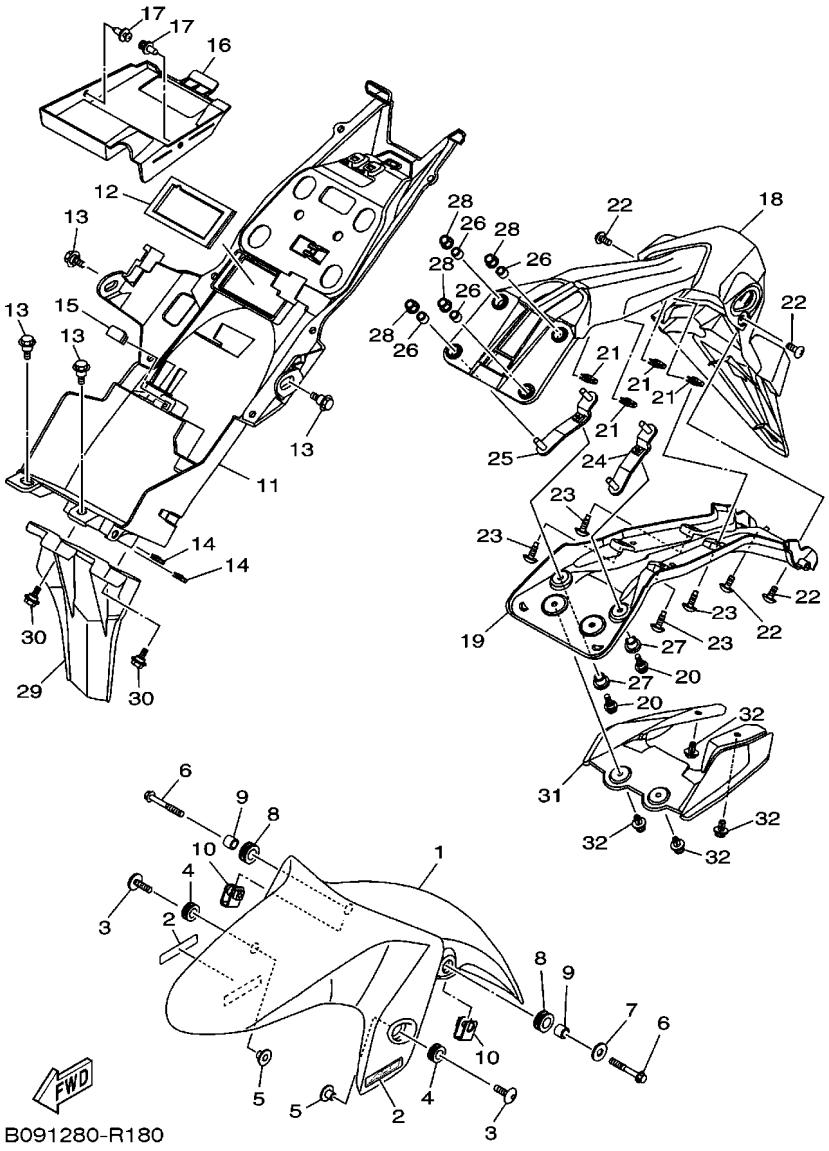


## FIG. 18 PARA-LAMA

| REF. NO. | No. PEÇA | DESCRIÇÃO | B091 | | | | | OBSERVAÇÕES |
|---|---|---|---|---|---|---|---|---|
| 1 | 1WD–F1511–00–P4 | PARA-LAMA DIANTEIRO | 1 | | | | | MS1 |
| | 1WD–F1511–00–P5 | PARA-LAMA DIANTEIRO | 1 | | | | | RM7 |
| | 1WD–F1511–00–P0 | PARA-LAMA DIANTEIRO | 1 | | | | | SMX |
| 2 | B04–F1569–00 | GRAFICO 1 | 1 | | | | | UR PARA MS1 |
| | B04–F1569–20 | GRAFICO 1 | 1 | | | | | UR PARA RM7 |
| | B04–F1569–10 | GRAFICO 1 | 1 | | | | | UR PARA SMX |
| 3 | 90111–06137 | PARAFUSO | 2 | | | | | |
| 4 | 90480–12815 | ILHO DE BORRACHA | 2 | | | | | |
| 5 | 90387–068C5 | ESPACADOR | 2 | | | | | |
| 6 | 95027–06045 | PARAFUSO FLANGE | 2 | | | | | |
| 7 | 90201–06557 | ARRUELA PLANA | 1 | | | | | |
| 8 | 90480–15809 | ILHO DE BORRACHA | 2 | | | | | |
| 9 | 90387–068L0 | ESPACADOR | 2 | | | | | |
| 10 | 1WD–F1586–00 | SUPORTE | 2 | | | | | |
| 11 | 1WD–F1611–01 | PARA-LAMA TRASEIRO | 1 | | | | | |
| 12 | 1WD–F1669–00 | VEDACAO | 1 | | | | | |
| 13 | 90109–063F1 | PARAFUSO | 4 | | | | | |
| 14 | 90183–05076 | PORCA MOLA | 2 | | | | | |
| 15 | 1WD–F16A2–00 | VEDACAO 2 | 1 | | | | | |
| 16 | 1WD–F163E–00 | TAMPA DO PARA-LAMA TRASEIRO 2 | 1 | | | | | |
| 17 | 90269–06081 | REBITE | 2 | | | | | |
| 18 | 1WD–F1629–01 | PROTETOR DE POEIRA | 1 | | | | | |
| 19 | 1WD–F1617–00 | SUPORTE DO PARALAMA | 1 | | | | | |
| 20 | 90111–05021 | PARAFUSO | 2 | | | | | |
| 21 | 90183–050A7 | PORCA MOLA | 4 | | | | | |
| 22 | 97707–50016 | PARAFUSO | 4 | | | | | |
| 23 | 90111–05018 | PARAFUSO | 4 | | | | | |

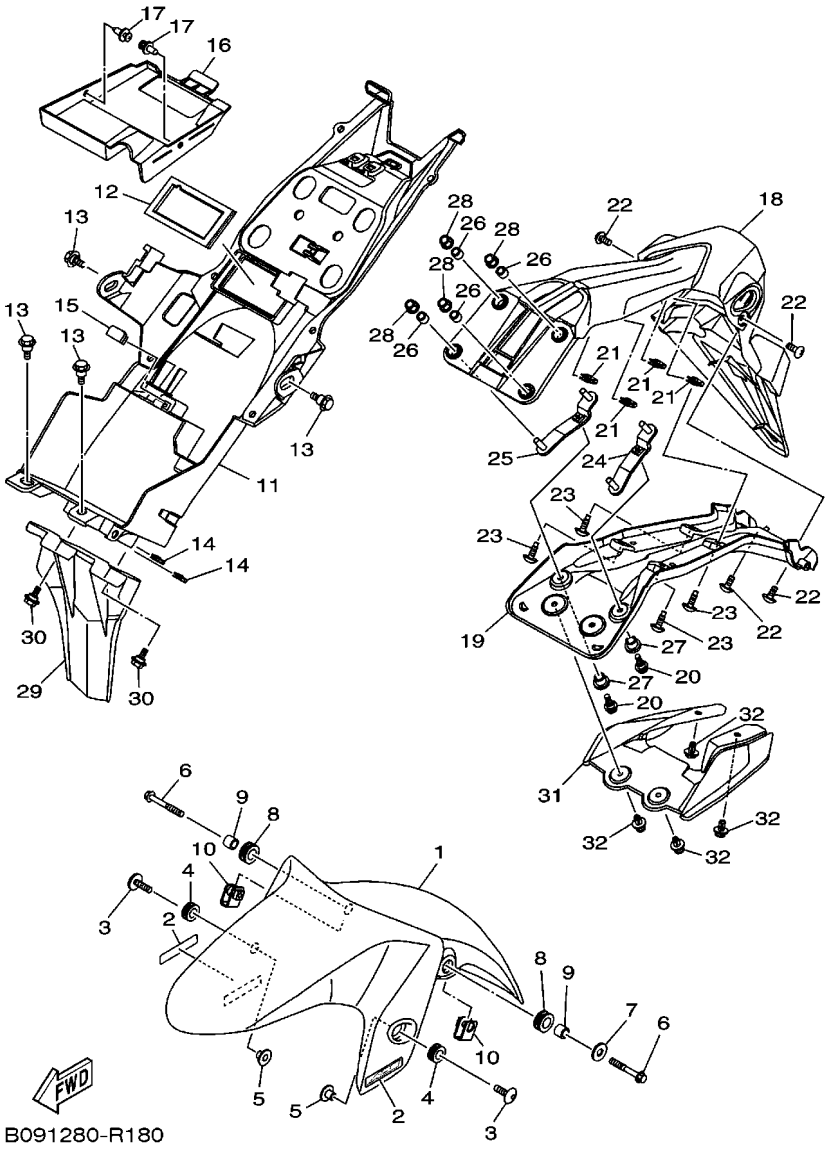


## FIG. 18 PARA-LAMA

| REF. NO. | No. PEÇA | DESCRIÇÃO | B091 | | | | | OBSERVAÇÕES |
|---|---|---|---|---|---|---|---|---|
| 24 | 1WD–F1688–00 | SUPORTE DO FIXADOR TRASEIRO | 1 | | | | | |
| 25 | 1WD–F1689–00 | SUPORTE DO FIXADOR TRASEIRO 2 | 1 | | | | | |
| 26 | 90387–066J9 | ESPACADOR | 4 | | | | | |
| 27 | 90387–068L9 | ESPACADOR | 2 | | | | | |
| 28 | 95602–06200 | PORCA AUTOTRAVANTE | 4 | | | | | |
| 29 | 1WD–F1621–00 | ABA | 1 | | | | | |
| 30 | 90109–05003 | PARAFUSO | 2 | | | | | |
| 31 | 1WD–F163A–00 | TAMPA DO PARA-LAMA TRASEIRO 1 | 1 | | | | | |
| 32 | 90269–06081 | REBITE | 4 | | | | | |

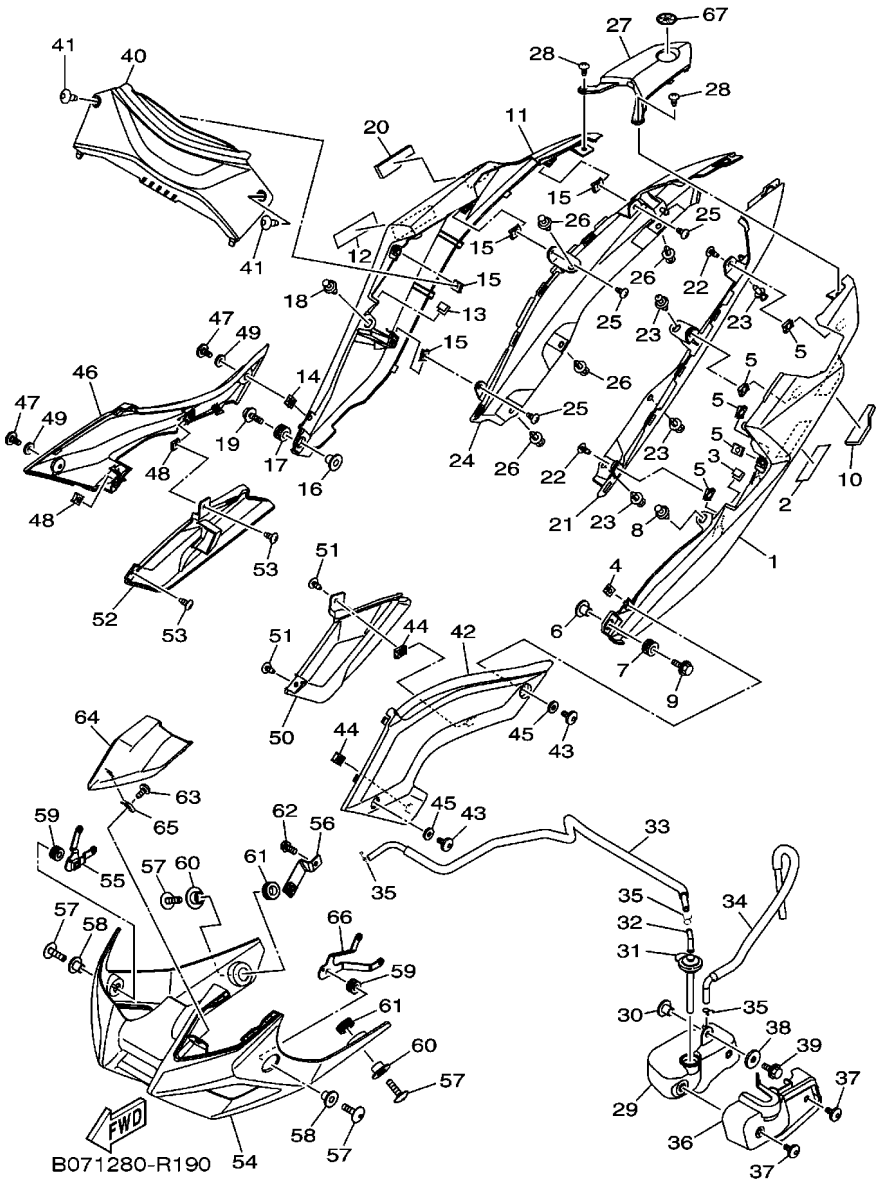


## FIG. 19 TAMPA LATERAL

| REF. NO. | No. PEÇA | DESCRIÇÃO | B091 | | | | | OBSERVAÇÕES |
|---|---|---|---|---|---|---|---|---|
| 1 | B04–F1711–00–P0 | TAMPA LATERAL 1 | 1 | | | | | MS1 |
| | B04–F1711–00–P1 | TAMPA LATERAL 1 | 1 | | | | | RM7 |
| | B04–F1711–00–P2 | TAMPA LATERAL 1 | 1 | | | | | SMX |
| 2 | B04–F1781–00 | EMBLEMA 1 | 1 | | | | | UR PARA MS1 |
| | 5BP–F153E–10 | EMBLEMA YAMAHA | 1 | | | | | UR PARA RM7 |
| | B04–F1781–20 | EMBLEMA 1 | 1 | | | | | UR PARA SMX |
| 3 | 31B–F8307–00 | VEDACAO | 1 | | | | | |
| 4 | 90183–050A7 | PORCA MOLA | 1 | | | | | |
| 5 | 90183–05807 | PORCA MOLA | 5 | | | | | |
| 6 | 90387–06899 | ESPACADOR | 1 | | | | | |
| 7 | 90480–12808 | ILHO DE BORRACHA | 1 | | | | | |
| 8 | 90269–06081 | REBITE | 1 | | | | | |
| 9 | 90119–06810 | PARAFUSO COM ARRUELA | 1 | | | | | |
| 10 | B04–F8307–00 | VEDACAO | 1 | | | | | |
| 11 | B04–F1721–00–P0 | TAMPA LATERAL 2 | 1 | | | | | MS1 |
| | B04–F1721–00–P1 | TAMPA LATERAL 2 | 1 | | | | | RM7 |
| | B04–F1721–00–P2 | TAMPA LATERAL 2 | 1 | | | | | SMX |
| 12 | B04–F1781–00 | EMBLEMA 1 | 1 | | | | | UR PARA MS1 |
| | 5BP–F153E–10 | EMBLEMA YAMAHA | 1 | | | | | UR PARA RM7 |
| | B04–F1781–20 | EMBLEMA 1 | 1 | | | | | UR PARA SMX |
| 13 | 31B–F8307–00 | VEDACAO | 1 | | | | | |
| 14 | 90183–050A7 | PORCA MOLA | 1 | | | | | |
| 15 | 90183–05807 | PORCA MOLA | 4 | | | | | |
| 16 | 90387–06899 | ESPACADOR | 1 | | | | | |
| 17 | 90480–12808 | ILHO DE BORRACHA | 1 | | | | | |
| 18 | 90269–06081 | REBITE | 1 | | | | | |
| 19 | 90119–06810 | PARAFUSO COM ARRUELA | 1 | | | | | |

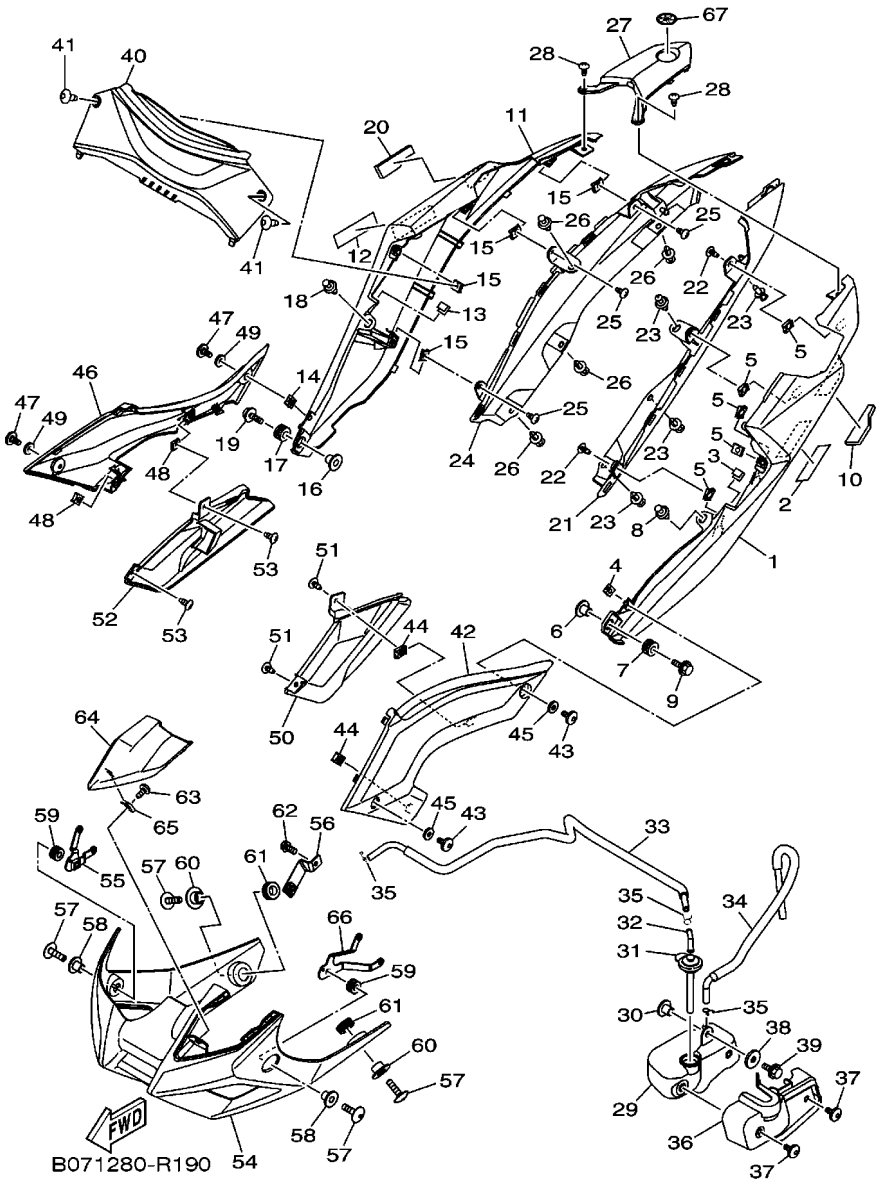


## FIG. 19 TAMPA LATERAL

| REF. NO. | No. PEÇA | DESCRIÇÃO | B091 | | | | | OBSERVAÇÕES |
|---|---|---|---|---|---|---|---|---|
| 20 | B04–F8307–10 | VEDACAO | 1 | | | | | |
| 21 | 1WD–F171L–00 | MOLDURA DA TAMPA LATERAL 1 | 1 | | | | | |
| 22 | 97707–50016 | PARAFUSO | 2 | | | | | |
| 23 | 90269–06081 | REBITE | 4 | | | | | |
| 24 | 1WD–F171M–00 | MOLDURA DA TAMPA LATERAL 2 | 1 | | | | | |
| 25 | 97707–50016 | PARAFUSO | 3 | | | | | |
| 26 | 90269–06081 | REBITE | 4 | | | | | |
| 27 | 1WD–F171N–00 | MOLDURA DA TAMPA LATERAL 3 | 1 | | | | | |
| 28 | 97707–50016 | PARAFUSO | 2 | | | | | |
| 29 | 1WD–F1871–00 | TANQUE DE RECUPERACAO | 1 | | | | | |
| 30 | 90387–06857 | ESPACADOR | 1 | | | | | |
| 31 | 1WD–F1875–00 | TAMPA | 1 | | | | | |
| 32 | 3C1–F1828–00 | CONEXAO | 1 | | | | | |
| 33 | 1WD–F1816–00 | TUBO 1 | 1 | | | | | |
| 34 | 1WD–F1817–00 | TUBO 2 | 1 | | | | | |
| 35 | 90467–08003 | PRESILHA | 3 | | | | | |
| 36 | 1WD–F172W–00 | TAMPA | 1 | | | | | |
| 37 | 90111–05003 | PARAFUSO | 2 | | | | | |
| 38 | 90201–06380 | ARRUELA PLANA | 1 | | | | | |
| 39 | 95807–06014 | PARAFUSO FLANGE | 1 | | | | | |
| 40 | 1WD–F1731–00–P4 | TAMPA LATERAL 3 | 1 | | | | | MBL2 P/ MS1,SMX |
| | 1WD–F1731–00–P0 | TAMPA LATERAL 3 | 1 | | | | | SMX PARA RM7 |
| 41 | 90160–05808 | PARAFUSO | 2 | | | | | |
| 42 | B04–F171E–00–P0 | TAMPA LATERAL 5 | 1 | | | | | MBL2 P/ MS1 |
| | B04–F171E–00–P1 | TAMPA LATERAL 5 | 1 | | | | | S8 PARA RM7,SMX |
| 43 | 90111–05003 | PARAFUSO | 2 | | | | | |
| 44 | 90183–05807 | PORCA MOLA | 1 | | | | | |

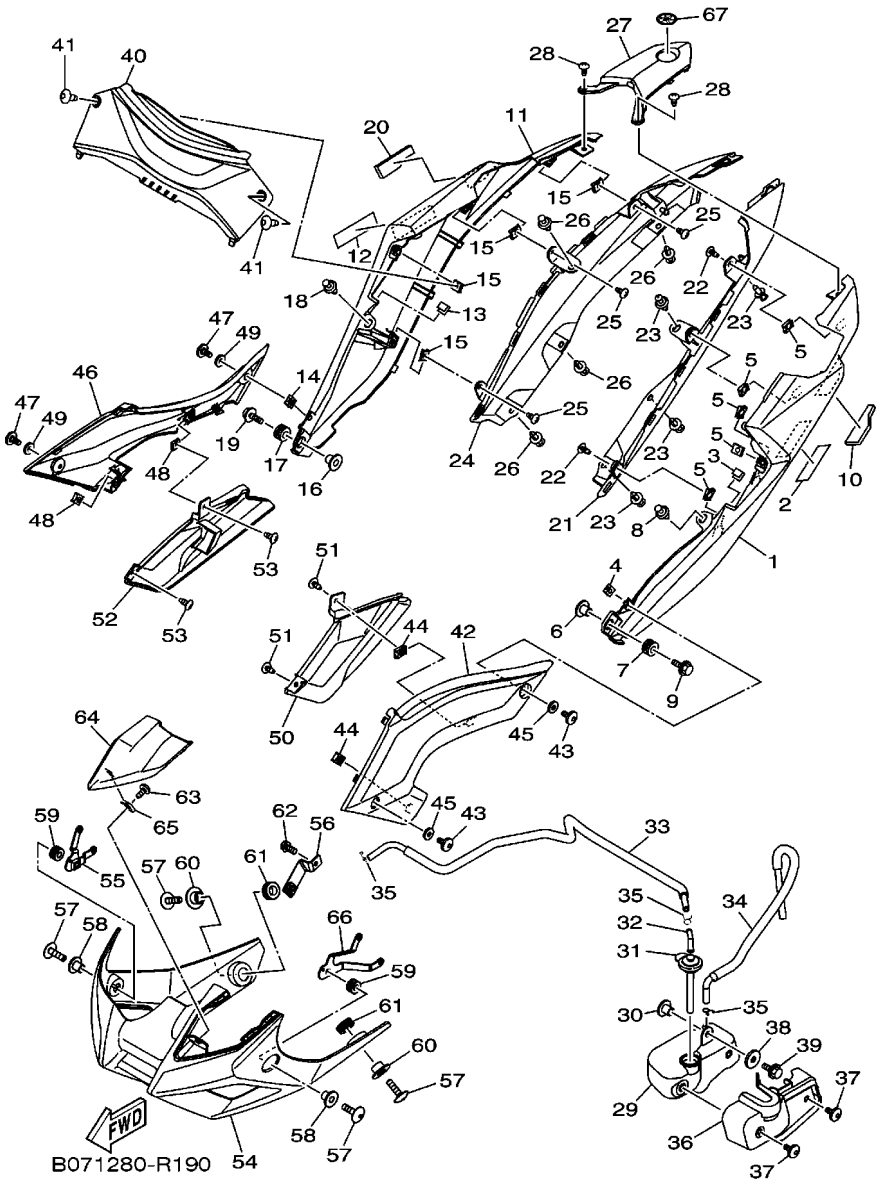


## FIG. 19 TAMPA LATERAL

| REF. NO. | No. PEÇA | DESCRIÇÃO | B091 | | | | | OBSERVAÇÕES |
|---|---|---|---|---|---|---|---|---|
| 45 | 90202–05180 | ARRUELA PLANA | 2 | | | | | |
| 46 | B04–F171X–00–P0 | TAMPA LATERAL 6 | 1 | | | | | MBL2 P/ MS1 |
| | B04–F171X–00–P1 | TAMPA LATERAL 6 | 1 | | | | | S8 PARA RM7,SMX |
| 47 | 90111–05003 | PARAFUSO | 2 | | | | | |
| 48 | 90183–05807 | PORCA MOLA | 2 | | | | | |
| 49 | 90202–05180 | ARRUELA PLANA | 2 | | | | | |
| 50 | B04–F1716–00 | TAMPA LATERAL | 1 | | | | | |
| 51 | 97702–50012 | PARAFUSO | 2 | | | | | |
| 52 | B04–F1726–00 | TAMPA LATERAL 2 | 1 | | | | | |
| 53 | 97702–50012 | PARAFUSO | 2 | | | | | |
| 54 | B08–F8385–00–P0 | TAMPA INFERIOR | 1 | | | | | MS1 |
| | B08–F8385–00–P1 | TAMPA INFERIOR | 1 | | | | | RM7 |
| | B08–F8385–00–P2 | TAMPA INFERIOR | 1 | | | | | SMX |
| 55 | B04–F833F–00 | SUPORTE 9 | 1 | | | | | |
| 56 | B04–F833G–00 | SUPORTE 10 | 1 | | | | | |
| 57 | 90111–06117 | PARAFUSO | 4 | | | | | |
| 58 | 90387–06899 | ESPACADOR | 2 | | | | | |
| 59 | 90480–12808 | ILHO DE BORRACHA | 2 | | | | | |
| 60 | 90387–09801 | ESPACADOR | 2 | | | | | |
| 61 | 90480–18418 | ILHO DE BORRACHA | 2 | | | | | |
| 62 | 95022–06012 | PARAFUSO FLANGE | 1 | | | | | |
| 63 | 97702–50012 | PARAFUSO | 1 | | | | | |
| 64 | B08–F842M–00 | TAMPA 1 | 1 | | | | | |
| 65 | 90183–05807 | PORCA MOLA | 1 | | | | | |
| 66 | B04–F833E–00 | SUPORTE 8 | 1 | | | | | |
| 67 | 1PA–F836B–00 | EMBLEMA (DIAPASAO YAMAHA) | 1 | | | | | |

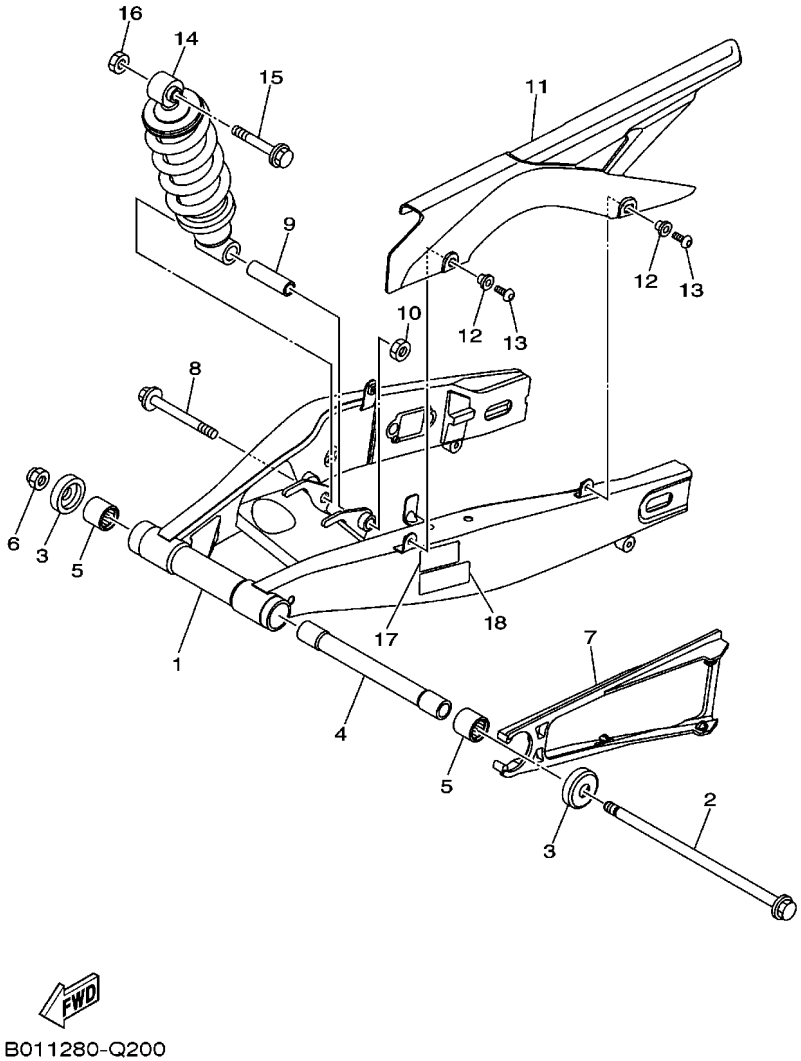


## FIG. 20 GARFO TRASEIRO. SUSPENSAO 1

| REF. NO. | No. PEÇA | DESCRIÇÃO | B091 | | | | | OBSERVAÇÕES |
|---|---|---|---|---|---|---|---|---|
| 1 | 1WD–F2110–00 | GARFO TRASEIRO COMPLETO | 1 | | | | | |
| 2 | B01–F2141–00 | EIXO DO PIVO | 1 | | | | | |
| 3 | 1WD–F2129–00 | TAMPA DE ENCOSTO 2 | 2 | | | | | |
| 4 | 1WD–F2184–00 | BUCHA | 1 | | | | | |
| 5 | 93320–32403 | ROLAMENTO | 2 | | | | | |
| 6 | 95602–14200 | PORCA AUTO-TRAVANTE | 1 | | | | | |
| 7 | B01–F2151–00 | VEDADOR DO PROTETOR | 1 | | | | | |
| 8 | 90105–12309 | PARAFUSO FLANGE | 1 | | | | | |
| 9 | 1WD–F248B–00 | ESPACADOR DA HASTE 1 | 1 | | | | | |
| 10 | 95602–12100 | PORCA AUTO-TRAVANTE | 1 | | | | | |
| 11 | 1WD–F2311–00 | CAPA DA CORRENTE | 1 | | | | | |
| 12 | 90387–06242 | ESPACADOR | 2 | | | | | |
| 13 | 90111–06119 | PARAFUSO | 2 | | | | | |
| 14 | 1WD–F2210–00 | AMORTECEDOR TRASEIRO CONJ. | 1 | | | | | |
| 15 | 90105–12093 | PARAFUSO FLANGE | 1 | | | | | |
| 16 | 95602–12100 | PORCA AUTO-TRAVANTE | 1 | | | | | |
| 17 | B01–F1668–00 | ETIQUETA DE PRESSAO DO PNEU | 1 | | | | | |
| 18 | B01–F111F–00 | ETIQUETA DE EMISSAO | 1 | | | | | |

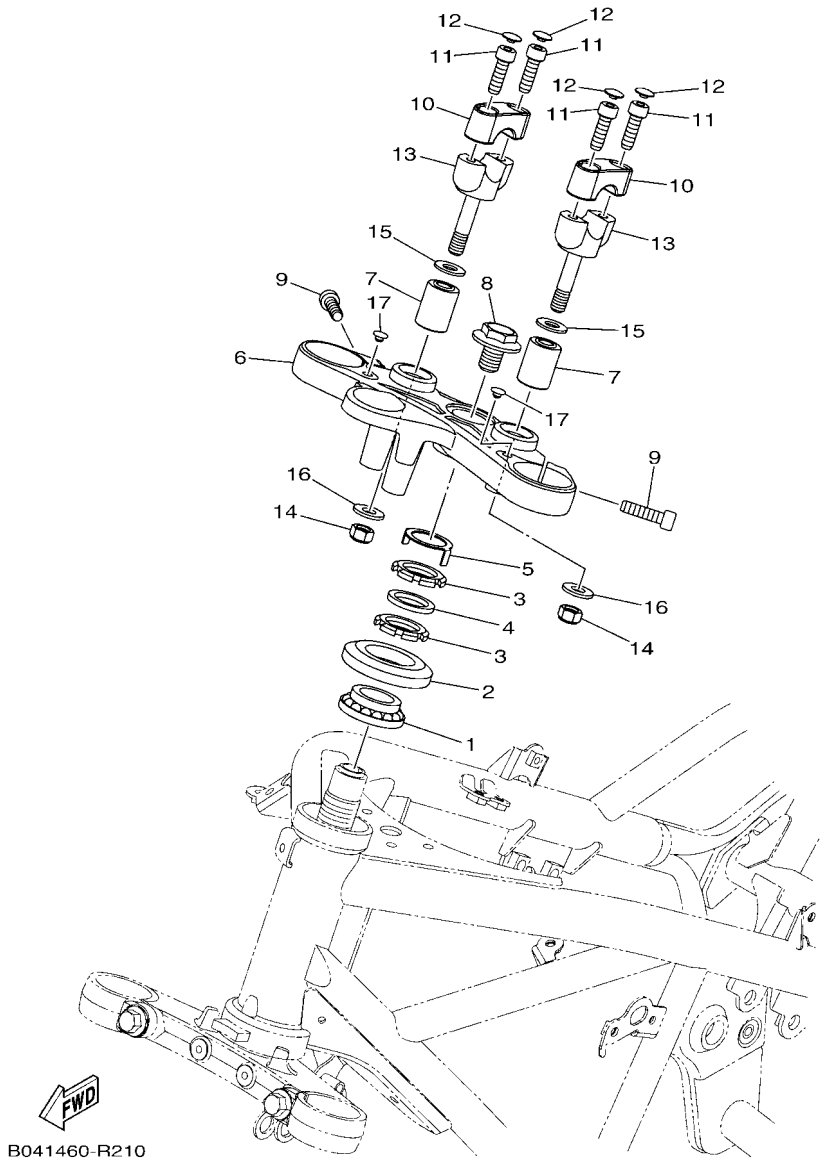


## FIG. 21 MESA DO GUIDAO

| REF. NO. | No. PEÇA | DESCRIÇÃO | B091 | | | | | OBSERVAÇÕES |
|---|---|---|---|---|---|---|---|---|
| 1 | 93399–999Y3 | ROLAMENTO | 1 | | | | | |
| 2 | 5BP–F3416–10 | CAPA DA PISTA DE ESFERA 2 | 1 | | | | | |
| 3 | 90179–25615 | PORCA | 2 | | | | | |
| 4 | 90202–26142 | ARRUELA PLANA | 1 | | | | | |
| 5 | 5BP–F3418–00 | ARRUELA ESPECIAL | 1 | | | | | |
| 6 | B04–F3435–00 | MESA DO GUIDAO COMPLETA | 1 | | | | | |
| 7 | 90388–10816 | AMORTIZADOR | 2 | | | | | |
| 8 | 90105–14102 | PARAFUSO FLANGE | 1 | | | | | |
| 9 | 91317–08030 | PARAFUSO | 2 | | | | | |
| 10 | B04–F3441–00–P2 | FIXADOR SUPERIOR DO GUIDAO | 2 | | | | | MBL2 |
| 11 | 91317–08025 | PARAFUSO | 4 | | | | | |
| 12 | 90338–06810 | TAMPAO | 4 | | | | | |
| 13 | B04–F3442–00 | FIXADOR INFERIOR DO GUIDAO | 2 | | | | | |
| 14 | 95607–10100 | PORCA AUTO-TRAVANTE | 2 | | | | | |
| 15 | 92902–10200 | ARRUELA | 2 | | | | | |
| 16 | 90201–10829 | ARRUELA PLANA | 2 | | | | | |
| 17 | 90338–06809 | TAMPAO | 2 | | | | | |

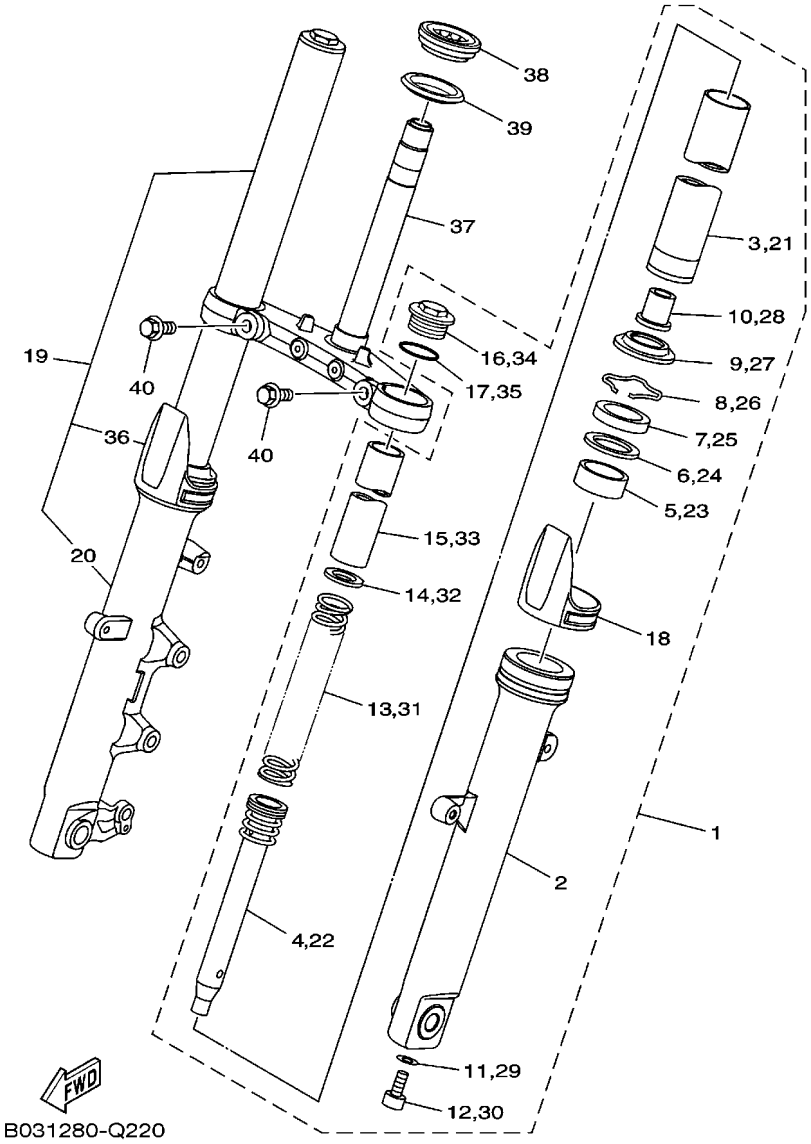


## FIG. 22 GARFO DIANTEIRO

| REF. NO. | No. PEÇA | DESCRIÇÃO | B091 | | | | | OBSERVAÇÕES |
|---|---|---|---|---|---|---|---|---|
| 1 | B01–F3102–00 | GARFO DIANTEIRO CONJ. (ESQ.) | 1 | | | | | |
| 2 | 1WD–F3126–00 | .TUBO EXTERNO 1 | 1 | | | | | |
| 3 | 1WD–F3110–00 | .TUBO INTERNO COMPLETO 1 | 1 | | | | | |
| 4 | 1WD–F3170–00 | .CILINDRO COMPLETO DO GARFO | 1 | | | | | |
| 5 | 45P–F3125–00 | .BUCHA (METAL LAMINA) 1 | 1 | | | | | |
| 6 | 45P–F3146–00 | .ARRUELA DO RETENTOR DE OLEO | 1 | | | | | |
| 7 | 45P–F3145–00 | .RETENTOR DE OLEO DO GARFO | 1 | | | | | |
| 8 | 45P–F3156–00 | .CLIPE DO RETENTOR DE OLEO | 1 | | | | | |
| 9 | 45P–F3144–00 | .PROTETOR DE POEIRA | 1 | | | | | |
| 10 | 1WD–F3173–00 | .VALVULA DE PRESSAO DO OLEO | 1 | | | | | |
| 11 | 509–F3158–L0 | .GAXETA | 1 | | | | | |
| 12 | 31B–F3181–00 | .PARAFUSO DO GARFO DIANTEIRO | 1 | | | | | |
| 13 | 1WD–F3141–00 | .MOLA DO GARFO DIANTEIRO | 1 | | | | | |
| 14 | 45P–F3149–00 | .ARRUELA DA MOLA SUPERIOR | 1 | | | | | |
| 15 | 1WD–F3118–00 | .ESPACADOR | 1 | | | | | |
| 16 | 45P–F3111–00 | .PARAFUSO, CAPA | 1 | | | | | |
| 17 | 45P–F3188–00 | .ANEL DE BORRACHA | 1 | | | | | |
| 18 | 1WS–2331G–00 | .CAPA | 1 | | | | | |
| 19 | B03–F3103–00 | GARFO DIANTEIRO CONJ. (DIR.) | 1 | | | | | |
| 20 | 2WD–F3136–00 | .TUBO EXTERNO 2 | 1 | | | | | |
| 21 | 1WD–F3110–00 | .TUBO INTERNO COMPLETO 1 | 1 | | | | | |
| 22 | 1WD–F3170–00 | .CILINDRO COMPLETO DO GARFO | 1 | | | | | |
| 23 | 45P–F3125–00 | .BUCHA (METAL LAMINA) 1 | 1 | | | | | |
| 24 | 45P–F3146–00 | .ARRUELA DO RETENTOR DE OLEO | 1 | | | | | |
| 25 | 45P–F3145–00 | .RETENTOR DE OLEO DO GARFO | 1 | | | | | |
| 26 | 45P–F3156–00 | .CLIPE DO RETENTOR DE OLEO | 1 | | | | | |
| 27 | 45P–F3144–00 | .PROTETOR DE POEIRA | 1 | | | | | |

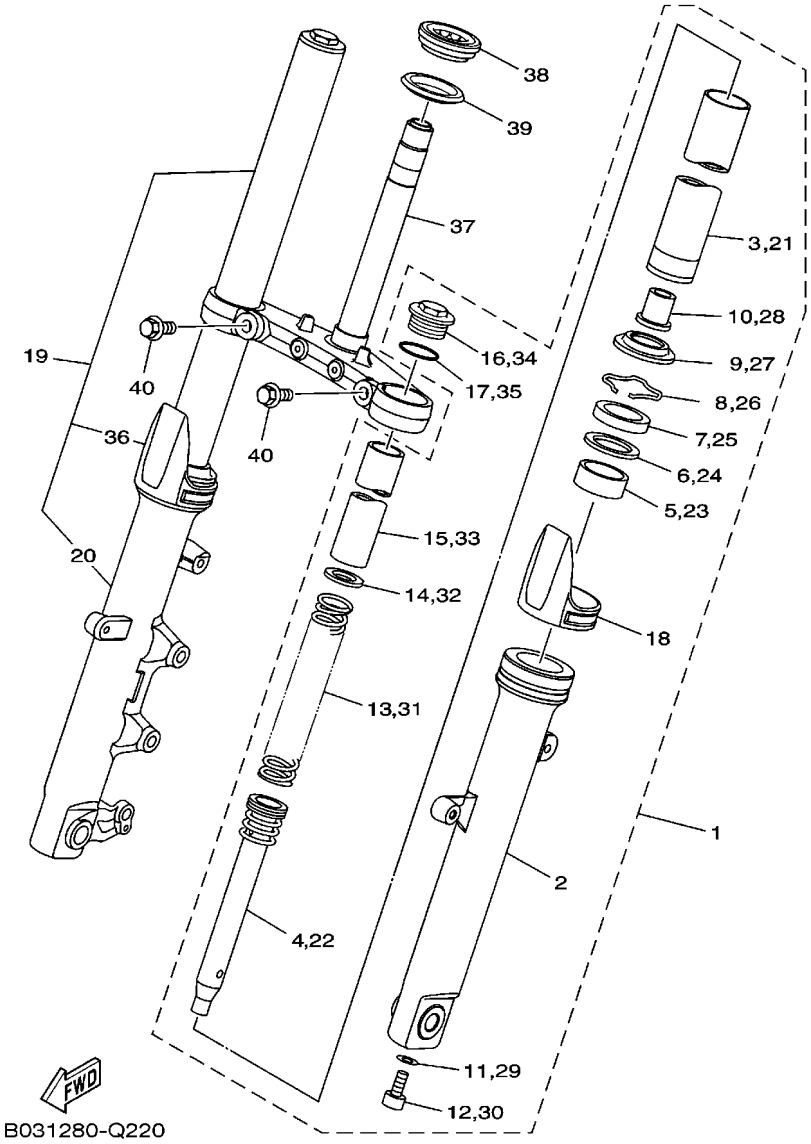


## FIG. 22 GARFO DIANTEIRO

| REF. NO. | No. PEÇA | DESCRIÇÃO | B091 | | | | | OBSERVAÇÕES |
|---|---|---|---|---|---|---|---|---|
| 28 | 1WD–F3173–00 | .VALVULA DE PRESSAO DO OLEO | 1 | | | | | |
| 29 | 509–F3158–L0 | .GAXETA | 1 | | | | | |
| 30 | 31B–F3181–00 | .PARAFUSO DO GARFO DIANTEIRO | 1 | | | | | |
| 31 | 1WD–F3141–00 | .MOLA DO GARFO DIANTEIRO | 1 | | | | | |
| 32 | 45P–F3149–00 | .ARRUELA DA MOLA SUPERIOR | 1 | | | | | |
| 33 | 1WD–F3118–00 | .ESPACADOR | 1 | | | | | |
| 34 | 45P–F3111–00 | .PARAFUSO, CAPA | 1 | | | | | |
| 35 | 45P–F3188–00 | .ANEL DE BORRACHA | 1 | | | | | |
| 36 | 1WS–2331G–00 | .CAPA | 1 | | | | | |
| 37 | B01–F3340–00 | SUPORTE INFERIOR COMPLETO | 1 | | | | | |
| 38 | 93399–99932 | ROLAMENTO | 1 | | | | | |
| 39 | 3FV–23462–00 | VEDACAO DA DIRECAO | 1 | | | | | |
| 40 | 45P–F3346–00 | PARAFUSO 1 | 2 | | | | | |

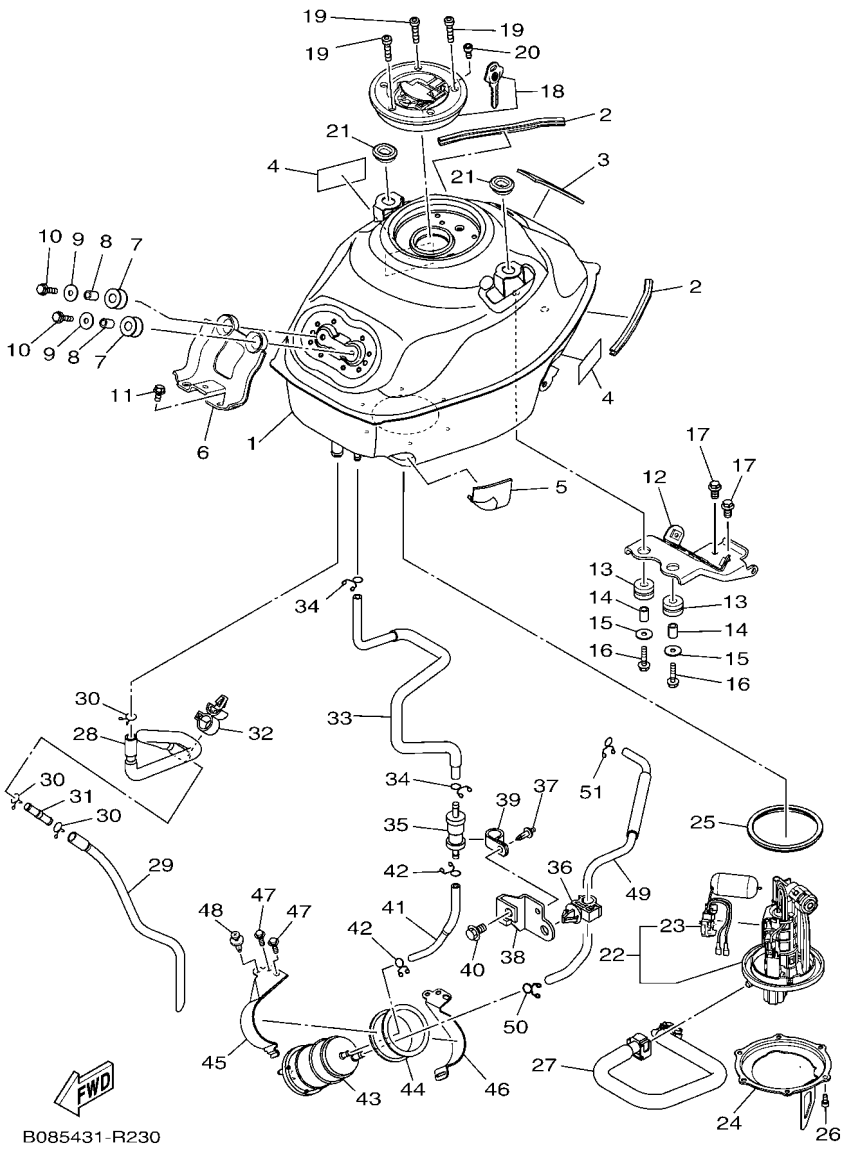


## FIG. 23 TANQUE DE COMBUSTIVEL

| REF. NO. | No. PEÇA | DESCRIÇÃO | B091 | | | | | OBSERVAÇÕES |
|---|---|---|---|---|---|---|---|---|
| 1 | 1WD–F4110–00 | TANQUE DE COMBUSTIVEL COMP. | 1 | | | | | |
| 2 | 1WD–F4188–00 | MOLDURA DO TANQUE | 2 | | | | | |
| 3 | 90520–03823 | PLACA AMORTIZADORA | 1 | | | | | |
| 4 | 5D9–F414G–00 | VEDACAO | 2 | | | | | |
| 5 | 45P–F414H–00 | PLACA AMORTIZADORA 1 | 1 | | | | | |
| 6 | 1WD–F412Y–00 | SUPORTE DE FIX. DO TANQUE | 1 | | | | | |
| 7 | 1WD–F4339–00 | ILHO | 2 | | | | | |
| 8 | 90387–06299 | ESPACADOR | 2 | | | | | |
| 9 | 90201–06380 | ARRUELA PLANA | 2 | | | | | |
| 10 | 95822–06025 | PARAFUSO FLANGE | 2 | | | | | |
| 11 | 95812–06012 | PARAFUSO FLANGE | 2 | | | | | |
| 12 | 1WD–F4191–00 | SUPORTE DO TANQUE 1 | 1 | | | | | |
| 13 | 90480–15807 | ILHO DE BORRACHA | 2 | | | | | |
| 14 | 90387–06299 | ESPACADOR | 2 | | | | | |
| 15 | 90201–06380 | ARRUELA PLANA | 2 | | | | | |
| 16 | 95822–06025 | PARAFUSO FLANGE | 2 | | | | | |
| 17 | 95022–08014 | PARAFUSO FLANGE | 2 | | | | | |
| 18 | 1WD–WF461–00 | KIT TAMPA DO TANQUE DE COMB. | 1 | | | | | |
| 19 | 90110–05806 | PARAFUSO HEXAGONAL INTERNO | 3 | | | | | |
| 20 | 91312–05010 | PARAFUSO HEXAGONAL | 1 | | | | | |
| 21 | 90480–01558 | ILHO DE BORRACHA | 2 | | | | | |
| 22 | 1WD–E3907–10 | BOMBA DE COMBUSTIVEL COMPLETA | 1 | | | | | |
| 23 | 1WD–H5752–00 | .UNIDADE SENSOR DE COMB. CONJ. | 1 | | | | | |
| 24 | 1WD–F4491–00 | SUPORTE BOMBA DE COMBUSTIVEL | 1 | | | | | |
| 25 | 3C1–F4486–00 | ANEL DE BORRACHA | 1 | | | | | |
| 26 | 91312–05010 | PARAFUSO HEXAGONAL | 6 | | | | | |
| 27 | 1WD–E3971–00 | TUBO DE COMBUSTIVEL 1 | 1 | | | | | |

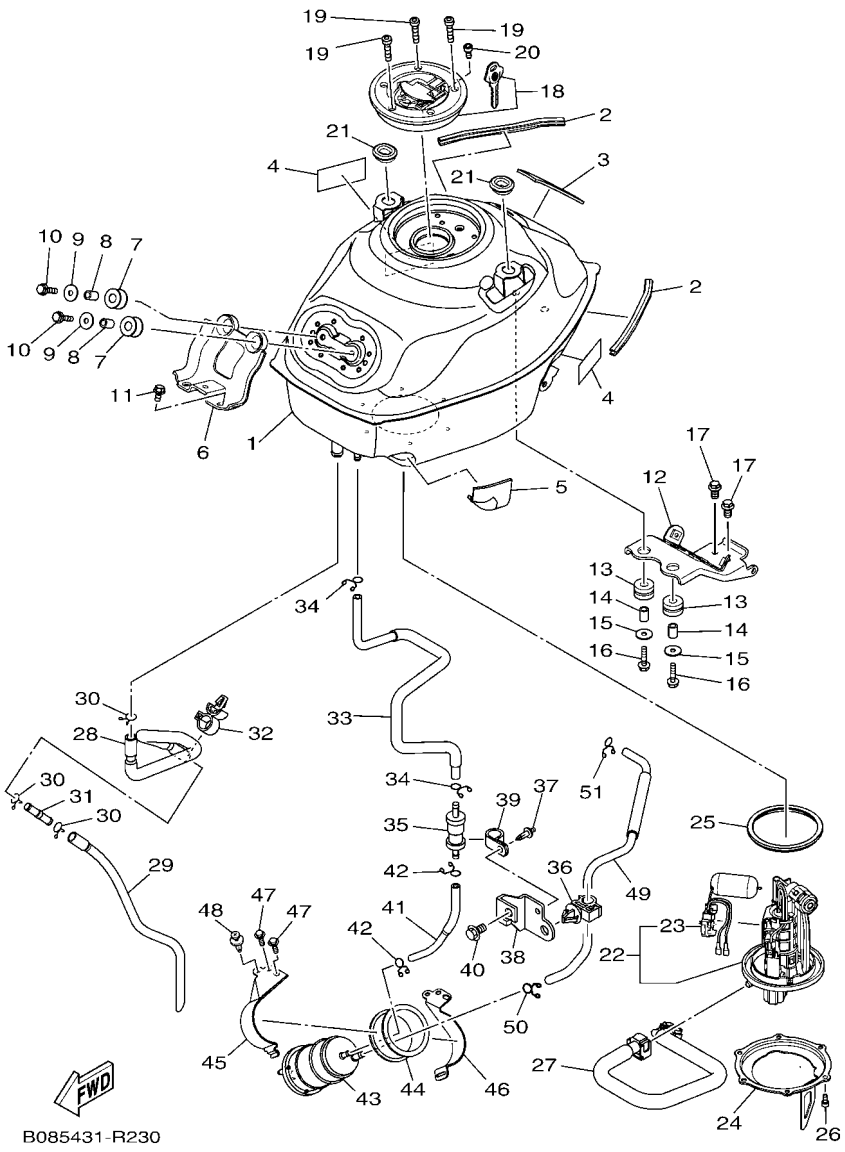


## FIG. 23 TANQUE DE COMBUSTIVEL

| REF. NO. | No. PEÇA | DESCRIÇÃO | B091 | | | | | OBSERVAÇÕES |
|---|---|---|---|---|---|---|---|---|
| 28 | 1WD–F4312–00 | TUBO 2 | 1 | | | | | |
| 29 | 1WD–F4314–00 | TUBO 4 | 1 | | | | | |
| 30 | 90467–15012 | PRESILHA | 3 | | | | | |
| 31 | 1WD–F4376–00 | JUNCAO DO TUBO 1 | 1 | | | | | |
| 32 | 90464–16012 | BRACADEIRA | 1 | | | | | |
| 33 | 2MS–F4314–01 | TUBO 4 | 1 | | | | | |
| 34 | 90467–09006 | PRESILHA | 2 | | | | | |
| 35 | 1DW–F4180–02 | VALVULA DE ROLETE SUPERIOR | 1 | | | | | |
| 36 | 90464–10008 | BRACADEIRA | 1 | | | | | |
| 37 | 90269–05008 | REBITE | 1 | | | | | |
| 38 | 2MS–F419F–00 | SUPORTE | 1 | | | | | |
| 39 | 90464–15014 | BRACADEIRA | 1 | | | | | |
| 40 | 95027–08012 | PARAFUSO FLANGE | 1 | | | | | |
| 41 | 2MS–F4315–00 | TUBO 5 | 1 | | | | | |
| 42 | 90467–09006 | PRESILHA | 2 | | | | | |
| 43 | 2MS–F4170–00 | CANISTER CONJ. | 1 | | | | | |
| 44 | 2MS–F483H–00 | BRACADEIRA | 1 | | | | | |
| 45 | 2MS–F115R–00 | SUPORTE DA CAIXA DO FILTRO | 1 | | | | | |
| 46 | 2MS–F134X–00 | SUPORTE | 1 | | | | | |
| 47 | 95027–06016 | PARAFUSO FLANGE | 2 | | | | | |
| 48 | 90269–06081 | REBITE | 1 | | | | | |
| 49 | 2MS–F4316–00 | TUBO 6 | 1 | | | | | |
| 50 | 90467–11009 | PRESILHA | 1 | | | | | |
| 51 | 90467–09006 | PRESILHA | 1 | | | | | |

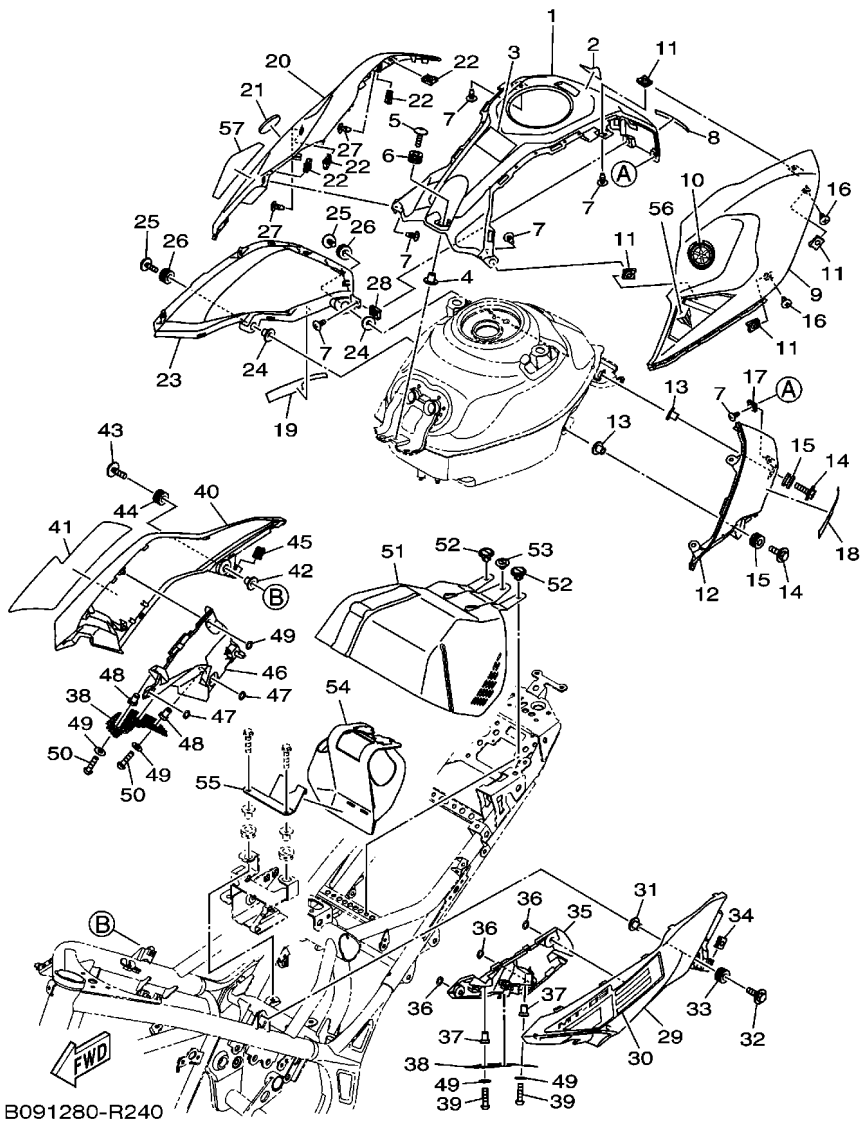


## FIG. 24 TANQUE DE COMBUSTIVEL 2

| REF. NO. | No. PEÇA | DESCRIÇÃO | B091 | | | | | OBSERVAÇÕES |
|---|---|---|---|---|---|---|---|---|
| 1 | B04–F41B1–00–P0 | CAPA DO TANQUE | 1 | | | | | MBL2 |
| 2 | B04–F4254–00 | GRAFICO DO TANQUE 7 | 1 | | | | | |
| 3 | 22D–F118K–00 | ETIQUETA DE ATENCAO | 1 | | | | | |
| 4 | 90387–06899 | ESPACADOR | 1 | | | | | |
| 5 | 90111–06117 | PARAFUSO | 1 | | | | | |
| 6 | 90480–12808 | ILHO DE BORRACHA | 1 | | | | | |
| 7 | 97702–50012 | PARAFUSO | 6 | | | | | |
| 8 | B04–F414E–00 | VEDACAO 2 | 1 | | | | | |
| 9 | B04–F4129–00–P0 | TAMPA LATERAL 1 | 1 | | | | | MS1 |
| | B04–F4129–00–P1 | TAMPA LATERAL 1 | 1 | | | | | RM7 |
| | B04–F4129–00–P2 | TAMPA LATERAL 1 | 1 | | | | | SMX |
| 10 | 1WD–F413B–00 | EMBLEMA | 1 | | | | | |
| 11 | 90183–05807 | PORCA MOLA | 4 | | | | | |
| 12 | B04–F4121–00–P0 | ASSENTO DO ARTICULADOR 1 | 1 | | | | | MS1 |
| | B04–F4121–00–P1 | ASSENTO DO ARTICULADOR 1 | 1 | | | | | SMX |
| 13 | 90387–06899 | ESPACADOR | 2 | | | | | |
| 14 | 90119–05020 | PARAFUSO COM ARRUELA | 2 | | | | | |
| 15 | 90480–12808 | ILHO DE BORRACHA | 2 | | | | | |
| 16 | 97702–50012 | PARAFUSO | 2 | | | | | |
| 17 | 90183–05807 | PORCA MOLA | 1 | | | | | |
| 18 | B04–F41A3–00 | VEDACAO 3 | 1 | | | | | |
| 19 | B04–F41A4–00 | VEDACAO 4 | 1 | | | | | |
| 20 | B04–F4139–00–P0 | TAMPA LATERAL 2 | 1 | | | | | MS1 |
| | B04–F4139–00–P1 | TAMPA LATERAL 2 | 1 | | | | | RM7 |
| | B04–F4139–00–P2 | TAMPA LATERAL 2 | 1 | | | | | SMX |
| 21 | 1WD–F413B–00 | EMBLEMA | 1 | | | | | |
| 22 | 90183–05807 | PORCA MOLA | 4 | | | | | |

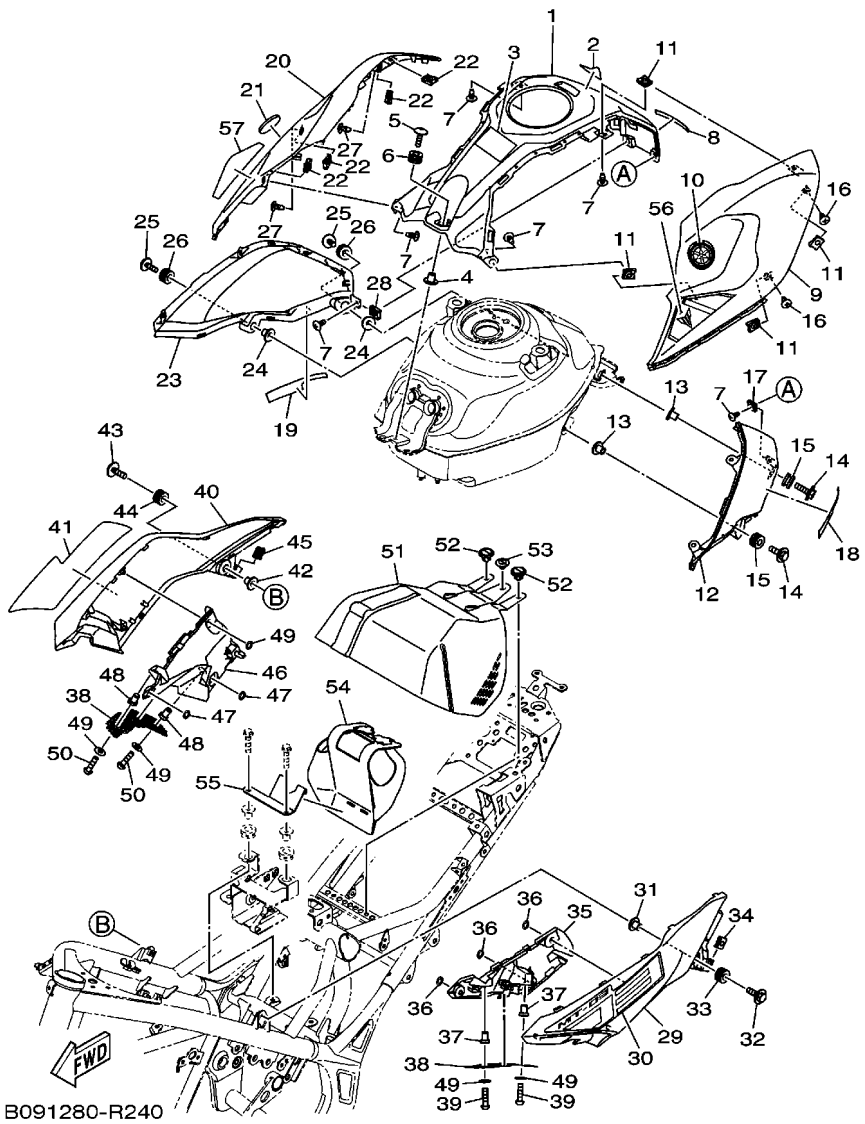


## FIG. 24 TANQUE DE COMBUSTIVEL 2

| REF. NO. | No. PEÇA | DESCRIÇÃO | B091 | | | | | OBSERVAÇÕES |
|---|---|---|---|---|---|---|---|---|
| 23 | B04–F4122–00–P0 | ASSENTO DO ARTICULADOR 2 | 1 | | | | | MS1 |
| | B04–F4122–00–P1 | ASSENTO DO ARTICULADOR 2 | 1 | | | | | RM7,SMX |
| 24 | 90387–06899 | ESPACADOR | 2 | | | | | |
| 25 | 90119–05020 | PARAFUSO COM ARRUELA | 2 | | | | | |
| 26 | 90480–12808 | ILHO DE BORRACHA | 2 | | | | | |
| 27 | 97702–50012 | PARAFUSO | 2 | | | | | |
| 28 | 90183–05807 | PORCA MOLA | 1 | | | | | |
| 29 | B04–F137W–00–P0 | TOMADA DE AR ESQUERDA 1 | 1 | | | | | MBL2 |
| 30 | B05–F137N–00 | GRAFICO 1 | 1 | | | | | UR PARA MS1 |
| | B05–F137N–10 | GRAFICO 1 | 1 | | | | | UR PARA RM7 |
| | B05–F137N–20 | GRAFICO 1 | 1 | | | | | UR PARA SMX |
| 31 | 90387–06899 | ESPACADOR | 1 | | | | | |
| 32 | 90119–06810 | PARAFUSO COM ARRUELA | 1 | | | | | |
| 33 | 90480–12808 | ILHO DE BORRACHA | 1 | | | | | |
| 34 | 90183–050A7 | PORCA MOLA | 1 | | | | | |
| 35 | B04–F836K–00 | PAINEL INTERNO 1 | 1 | | | | | |
| 36 | 90183–06815 | PORCA MOLA | 3 | | | | | |
| 37 | 90179–04003 | PORCA | 2 | | | | | |
| 38 | B04–F837N–00 | TOMADA DA ADMISSAO DE AR 1 | 2 | | | | | |
| 39 | 92017–04020 | PARAFUSO | 2 | | | | | |
| 40 | B04–F137X–00–P0 | TOMADA DE AR DIREITA 2 | 1 | | | | | MBL2 |
| 41 | B05–F137P–00 | GRAFICO 2 | 1 | | | | | UR PARA MS1 |
| | B05–F137P–10 | GRAFICO 2 | 1 | | | | | UR PARA RM7 |
| | B05–F137P–20 | GRAFICO 2 | 1 | | | | | UR PARA SMX |
| 42 | 90387–06899 | ESPACADOR | 1 | | | | | |
| 43 | 90119–06810 | PARAFUSO COM ARRUELA | 1 | | | | | |
| 44 | 90480–12808 | ILHO DE BORRACHA | 1 | | | | | |

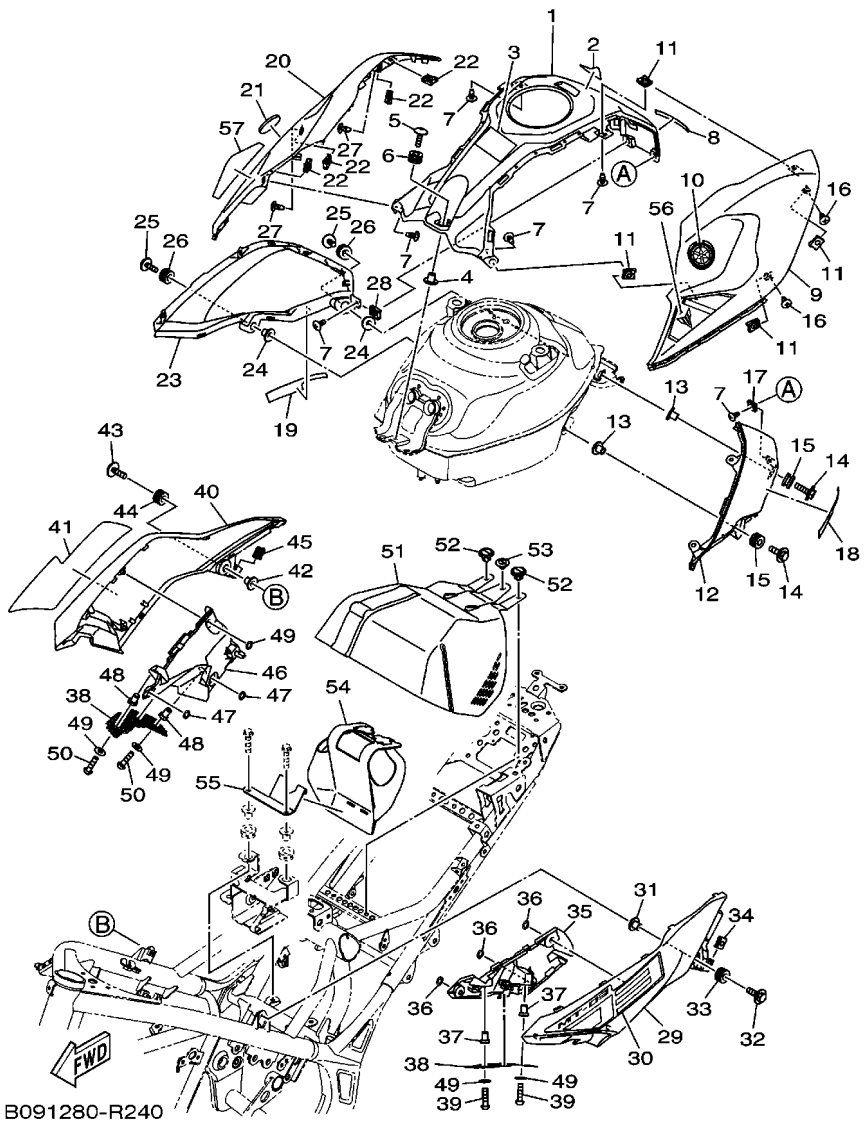


## FIG. 24 TANQUE DE COMBUSTIVEL 2

| REF. NO. | No. PEÇA | DESCRIÇÃO | B091 | | | | | OBSERVAÇÕES |
|---|---|---|---|---|---|---|---|---|
| 45 | 90183–050A7 | PORCA MOLA | 1 | | | | | |
| 46 | B04–F836L–00 | PAINEL INTERNO 2 | 1 | | | | | |
| 47 | 90183–06815 | PORCA MOLA | 3 | | | | | |
| 48 | 90179–04003 | PORCA | 2 | | | | | |
| 49 | 92907–04200 | ARRUELA | 4 | | | | | |
| 50 | 92017–04020 | PARAFUSO | 2 | | | | | |
| 51 | B04–E449E–00 | TAMPA DO FILTRO DE AR | 1 | | | | | |
| 52 | 90269–07076 | REBITE | 2 | | | | | |
| 53 | 90269–09001 | REBITE | 1 | | | | | |
| 54 | B04–F1642–00 | ABA DO PROTETOR | 1 | | | | | |
| 55 | B04–F1533–00 | FIXADOR DA ABA DO PROTETOR | 1 | | | | | |
| 56 | B04–F4244–00 | GRAFICO DO TANQUE 1 | 1 | | | | | UR PARA MS1 |
| | B04–F4244–10 | GRAFICO DO TANQUE 1 | 1 | | | | | UR PARA RM7 |
| | B04–F4244–20 | GRAFICO DO TANQUE 1 | 1 | | | | | UR PARA SMX |
| 57 | B04–F4245–00 | GRAFICO DO TANQUE 2 | 1 | | | | | UR PARA MS1 |
| | B04–F4245–10 | GRAFICO DO TANQUE 2 | 1 | | | | | UR PARA RM7 |
| | B04–F4245–20 | GRAFICO DO TANQUE 2 | 1 | | | | | UR PARA SMX |

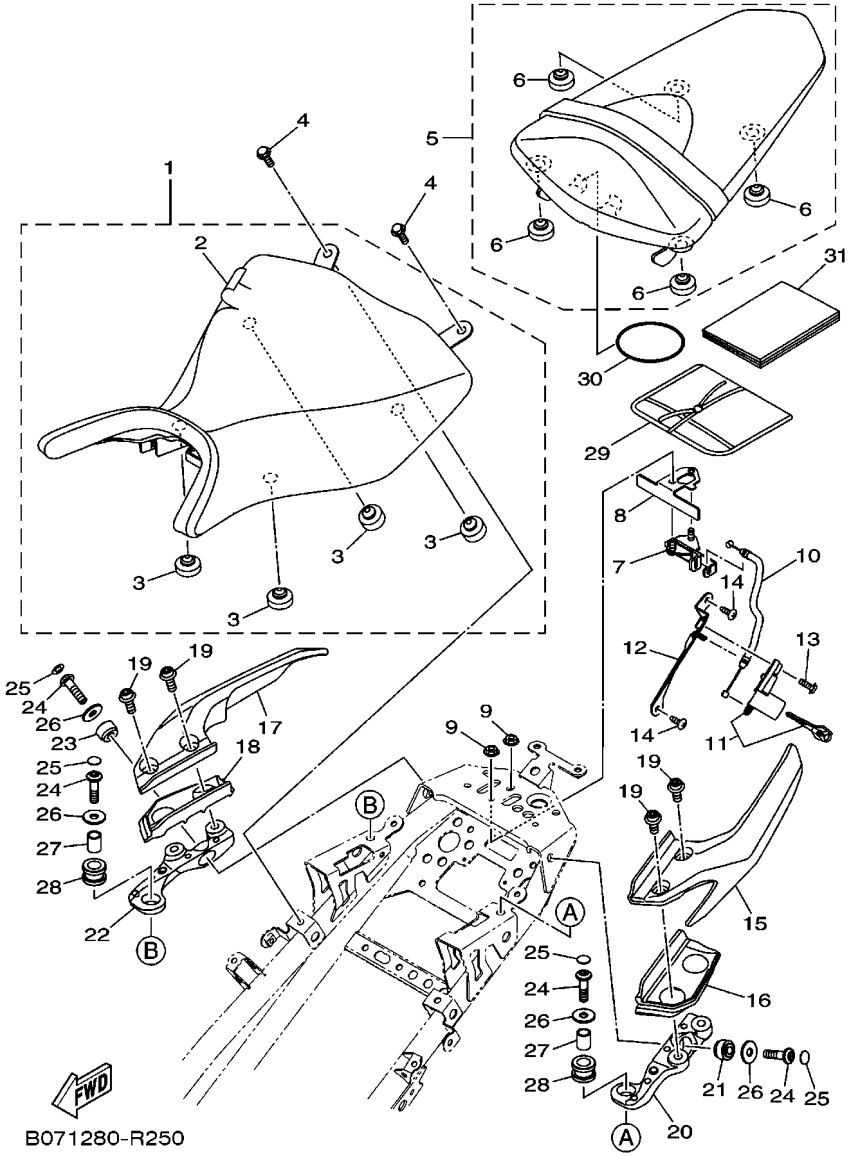


## FIG. 25 ASSENTO

| REF. NO. | No. PEÇA | DESCRIÇÃO | B091 | | | | | OBSERVAÇÕES |
|---|---|---|---|---|---|---|---|---|
| 1 | B04–F4710–00 | SELIM SIMPLES COMPLETO | 1 | | | | | |
| 2 | 1WD–F4711–00 | .CAPA DO SELIM SIMPLES | 1 | | | | | |
| 3 | 5BP–F4741–00 | .AMORTIZADOR | 4 | | | | | |
| 4 | 95022–06012 | PARAFUSO FLANGE | 2 | | | | | |
| 5 | 1WD–F4750–00 | RABETA SELIM CONJ . | 1 | | | | | |
| 6 | 3C1–F4741–00 | .AMORTIZADOR | 4 | | | | | |
| 7 | 1WD–F4780–00 | TRAVA DO SELIM CONJ. | 1 | | | | | |
| 8 | 1WD–F4792–00 | PLACA | 1 | | | | | |
| 9 | 95707–06500 | PORCA FLANGE | 2 | | | | | |
| 10 | 1WD–F478E–00 | CABO DA TRAVA DO SELIM | 1 | | | | | |
| 11 | 1WD–WF479–00 | ROTOR DA TRAVA DO SELIM | 1 | | | | | |
| 12 | 1WD–F117K–00 | SUPORTE DA TRAVA | 1 | | | | | |
| 13 | 90159–06054 | PARAFUSO COM ARRUELA | 1 | | | | | |
| 14 | 97702–50016 | PARAFUSO | 2 | | | | | |
| 15 | B04–F474A–00–P0 | SUPORTE DO CARONA 1 | 1 | | | | | MBL2 PARA MS1 |
| | B04–F474A–00–P1 | SUPORTE DO CARONA 1 | 1 | | | | | S8 PARA RM7,SMX |
| 16 | B04–F4845–00 | TAMPA 1 | 1 | | | | | |
| 17 | B04–F474W–00–P0 | SUPORTE DO CARONA 2 | 1 | | | | | MBL2 PARA MS1 |
| | B04–F474W–00–P1 | SUPORTE DO CARONA 2 | 1 | | | | | S8 PARA RM7,SMX |
| 18 | B04–F4846–00 | TAMPA 2 | 1 | | | | | |
| 19 | 90110–08805 | PARAFUSO HEXAGONAL INTERNO | 4 | | | | | |
| 20 | B04–F474H–00 | SUPORTE DO CARONA 1 | 1 | | | | | |
| 21 | 90388–08802 | AMORTIZADOR | 1 | | | | | |
| 22 | B04–F474J–00 | SUPORTE DO CARONA 2 | 1 | | | | | |
| 23 | 90388–08802 | AMORTIZADOR | 1 | | | | | |
| 24 | 90111–08826 | PARAFUSO | 4 | | | | | |
| 25 | 90338–06810 | TAMPAO | 4 | | | | | |

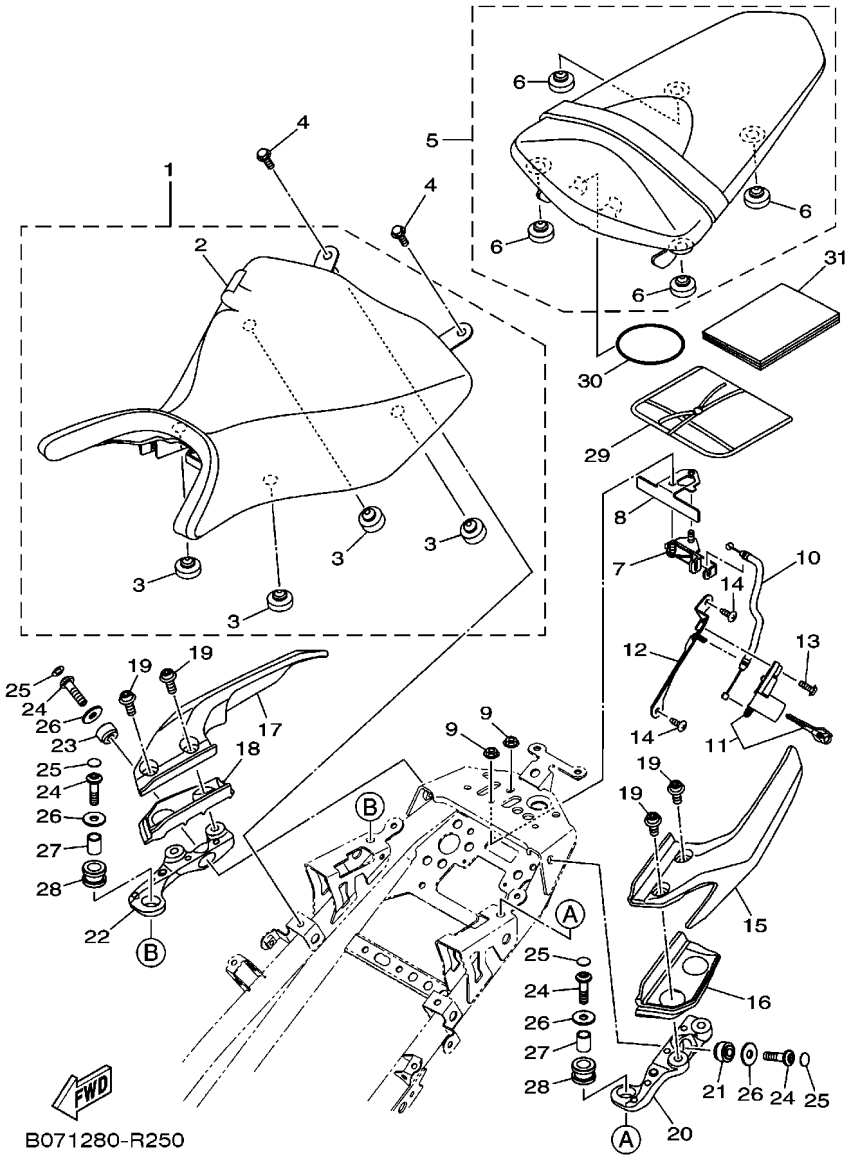


## FIG. 25 ASSENTO

| REF. NO. | No. PEÇA | DESCRIÇÃO | B091 | | | | | OBSERVAÇÕES |
|---|---|---|---|---|---|---|---|---|
| 26 | 90201–08119 | ARRUELA PLANA | 4 | | | | | |
| 27 | 90387–10842 | ESPACADOR | 2 | | | | | |
| 28 | 90480–18812 | ILHO DE BORRACHA | 2 | | | | | |
| 29 | 1WD–F8100–00 | JOGO DE FERRAMENTAS | 1 | | | | | |
| 30 | 5TL–H2131–00 | CINTA DA BATERIA | 1 | | | | | |
| 31 | B09–F8199–W0 | MANUAL DO PROPRIETARIO | 1 | | | | | |

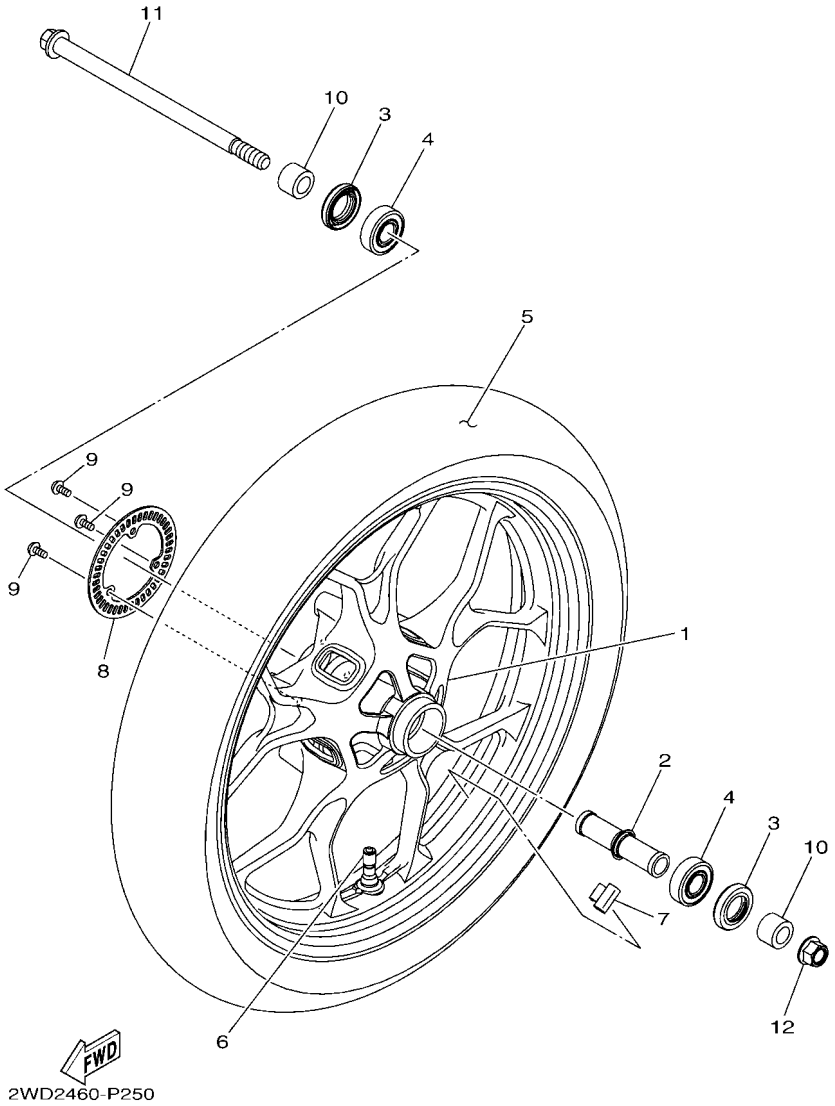


## FIG. 26 RODA DIANTEIRA 1

| REF. NO. | No. PEÇA | DESCRIÇÃO | B091 | | | | | OBSERVAÇÕES |
|---|---|---|---|---|---|---|---|---|
| 1 | 2WD–F5168–01–P0 | ARO DA RODA DIANTEIRA | 1 | | | | | DPBM15 PARA MS1 |
| | 2WD–F5168–01–98 | ARO DA RODA DIANTEIRA | 1 | | | | | LGB PARA RM7,SMX |
| 2 | B01–F510C–00 | ESPACADOR CONJUNTO | 1 | | | | | |
| 3 | 93106–26815 | RETENTOR DE OLEO | 2 | | | | | |
| 4 | 93306–302X7 | ROLAMENTO | 2 | | | | | |
| 5 | 94111–17805 | PNEU DIANT.(110/70R17M/CTL54H) | 1 | | | | | METZELER |
| 6 | 93900–00828 | VALVULA ARO DA RODA | 1 | | | | | |
| 7 | 5MT–25398–00 | BALANCEADOR DA RODA (10G) | 1 | | | | | UN |
| | 5MT–25398–10 | BALANCEADOR DA RODA (20G) | 1 | | | | | UN |
| | 5MT–25398–20 | BALANCEADOR DA RODA (30G) | 1 | | | | | UN |
| 8 | 2DP–F517G–00 | ROTOR DO SENSOR | 1 | | | | | |
| 9 | 90149–05029 | PARAFUSO | 3 | | | | | |
| 10 | 1PA–F5386–00 | ESPACADOR DO EIXO DA COROA | 2 | | | | | |
| 11 | B01–F5181–00 | EIXO DA RODA | 1 | | | | | |
| 12 | 95602–14200 | PORCA AUTO-TRAVANTE | 1 | | | | | |

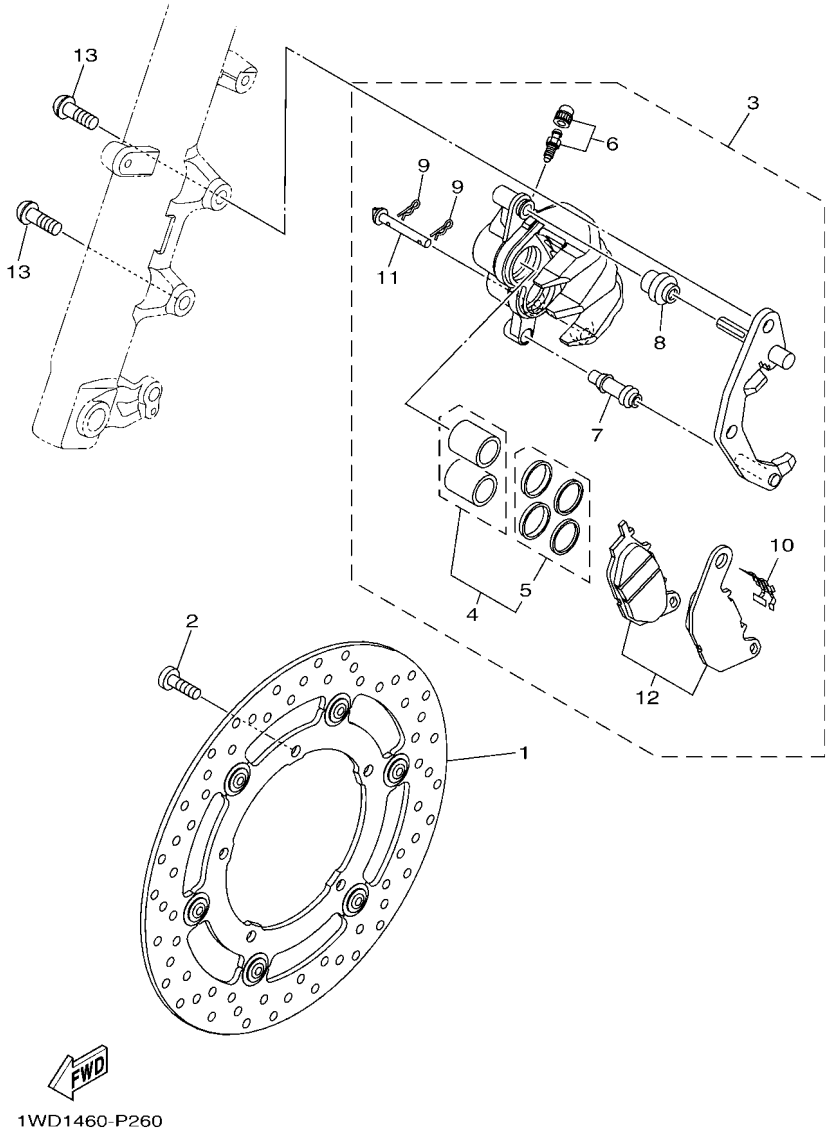


## FIG. 27 PINCA DE FREIO DIANTEIRA

| REF. NO. | No. PEÇA | DESCRIÇÃO | B091 | | | | | OBSERVAÇÕES |
|---|---|---|---|---|---|---|---|---|
| 1 | 1WD–F581U–00 | DISCO DE FREIO CONJ. (DIR.) | 1 | | | | | |
| 2 | 90111–08087 | PARAFUSO | 5 | | | | | |
| 3 | 1WD–F580U–01 | PINCA DO FREIO CONJ. (DIR.) | 1 | | | | | |
| 4 | 1WD–25802–00 | .JOGO DE PISTOES DA PINCA | 1 | | | | | |
| 5 | 1WD–25803–00 | ..JOGO DE RETENTORES DA PINCA | 1 | | | | | |
| 6 | 4C9–W0048–00 | .KIT DO PARAFUSO SANGRADOR | 1 | | | | | |
| 7 | 5YP–F5937–00 | .CAPA DA PINCA DE FREIO | 1 | | | | | |
| 8 | 5YP–F5917–00 | .PROTETOR DA PINCA | 1 | | | | | |
| 9 | 5YP–F5925–01 | .PRESILHA | 2 | | | | | |
| 10 | 1WD–F5919–00 | .SUPORTE DA PASTILHA DE FREIO | 1 | | | | | |
| 11 | 5YP–F5924–00 | .PINO DA PASTILHA DE FREIO | 1 | | | | | |
| 12 | 1WD–25805–00 | .KIT DE PASTILHAS DE FREIO | 1 | | | | | |
| 13 | 90149–10044 | PARAFUSO | 2 | | | | | |

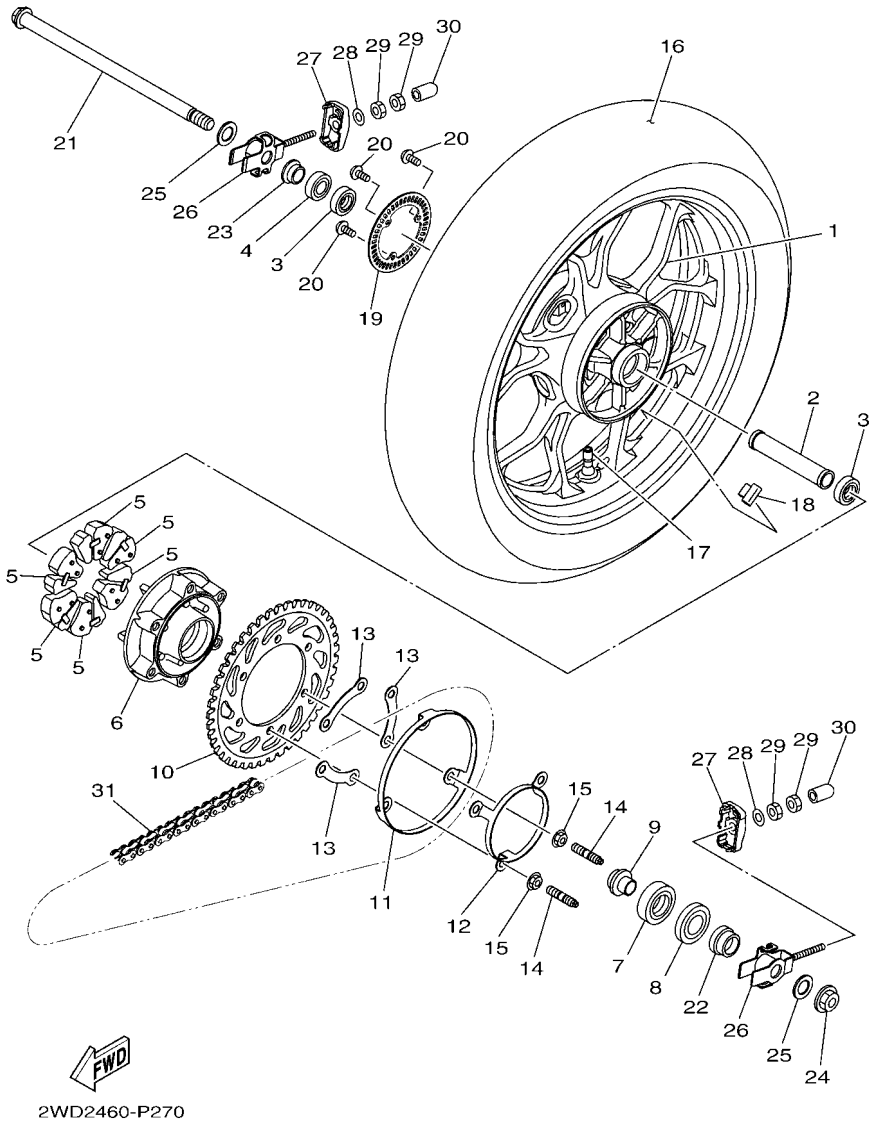


## FIG. 28 RODA TRASEIRA 1

| REF. NO. | No. PEÇA | DESCRIÇÃO | B091 | | | | | OBSERVAÇÕES |
|---|---|---|---|---|---|---|---|---|
| 1 | 2WD–F5338–01–P0 | ARO DA RODA TRASEIRA | 1 | | | | | DPBM15 PARA MS1 |
| | 2WD–F5338–01–98 | ARO DA RODA TRASEIRA | 1 | | | | | LGB PARA RM7,SMX |
| 2 | 90387–17810 | ESPACADOR | 1 | | | | | |
| 3 | 93306–253YE | ROLAMENTO | 2 | | | | | |
| 4 | 93106–23002 | RETENTOR DE OLEO | 1 | | | | | |
| 5 | 1WD–F5364–00 | AMORTIZADOR | 6 | | | | | |
| 6 | B01–F5366–00–35 | EMBREAGEM DO CUBO | 1 | | | | | SL |
| 7 | 93306–30450 | ROLAMENTO | 1 | | | | | |
| 8 | 93106–38046 | RETENTOR DE OLEO | 1 | | | | | |
| 9 | 1WD–F5377–00 | ESPACADOR DA RODA | 1 | | | | | |
| 10 | B01–F5444–00 | COROA DA RODA TRASEIRA (44D) | 1 | | | | | |
| 11 | 1WD–F537W–00 | SUPORTE 1 | 1 | | | | | |
| 12 | 1WD–F537X–00 | SUPORTE 2 | 1 | | | | | |
| 13 | 1WD–F539F–00 | PLACA 1 | 3 | | | | | |
| 14 | 90116–10065 | PRISIONEIRO | 6 | | | | | |
| 15 | 95602–10200 | PORCA AUTOTRAVANTE | 6 | | | | | |
| 16 | 94114–17805 | PNEU TRAS.(140/70R17M/CTL 66H) | 1 | | | | | METZELER |
| 17 | 93900–00828 | VALVULA ARO DA RODA | 1 | | | | | |
| 18 | 5MT–25398–00 | BALANCEADOR DA RODA (10G) | 1 | | | | | UN |
| | 5MT–25398–10 | BALANCEADOR DA RODA (20G) | 1 | | | | | UN |
| | 5MT–25398–20 | BALANCEADOR DA RODA (30G) | 1 | | | | | UN |
| 19 | 2DP–F517G–00 | ROTOR DO SENSOR | 1 | | | | | |
| 20 | 90149–05029 | PARAFUSO | 3 | | | | | |
| 21 | B01–F5381–00 | EIXO DA RODA | 1 | | | | | |
| 22 | 1WD–F5386–00 | ESPACADOR DO EIXO DA COROA | 1 | | | | | |
| 23 | B01–F5383–00 | ESPACADOR DO EIXO DA RODA | 1 | | | | | |
| 24 | 95602–16200 | PORCA AUTO-TRAVANTE | 1 | | | | | |

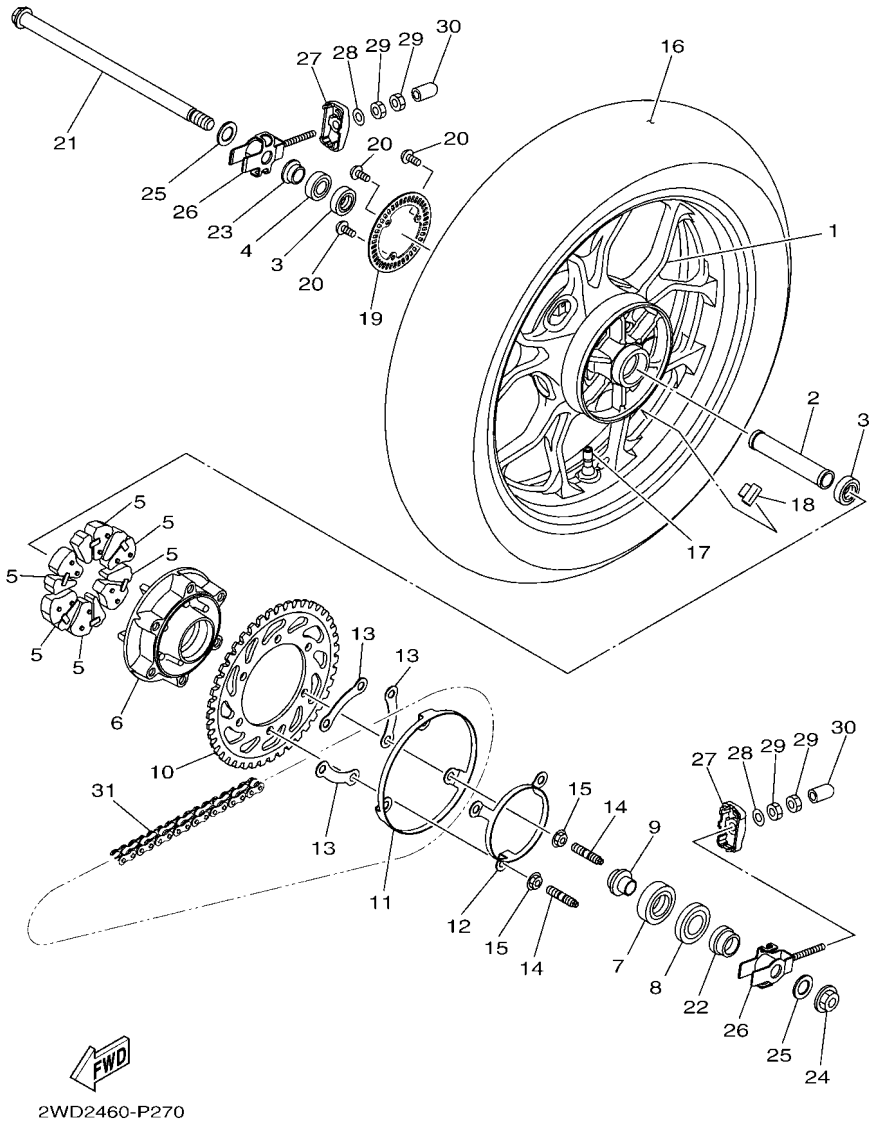


## FIG. 28 RODA TRASEIRA 1

| REF. NO. | No. PEÇA | DESCRIÇÃO | B091 | | | | | OBSERVAÇÕES |
|---|---|---|---|---|---|---|---|---|
| 25 | 90201–17809 | ARRUELA PLANA | 2 | | | | | |
| 26 | B01–F5388–00 | ESTICADOR DA CORRENTE 1 | 2 | | | | | |
| 27 | 1WD–F2174–00 | TERMINAL 1 | 2 | | | | | |
| 28 | 92902–08600 | ARRUELA PLANA | 2 | | | | | |
| 29 | 95302–08600 | PORCA | 4 | | | | | |
| 30 | 40D–E443G–00 | TUBO DE DRENO 2 | 2 | | | | | |
| 31 | 94568–H1114 | CORRENTE (DID520VD2) | 1 | | | | | |

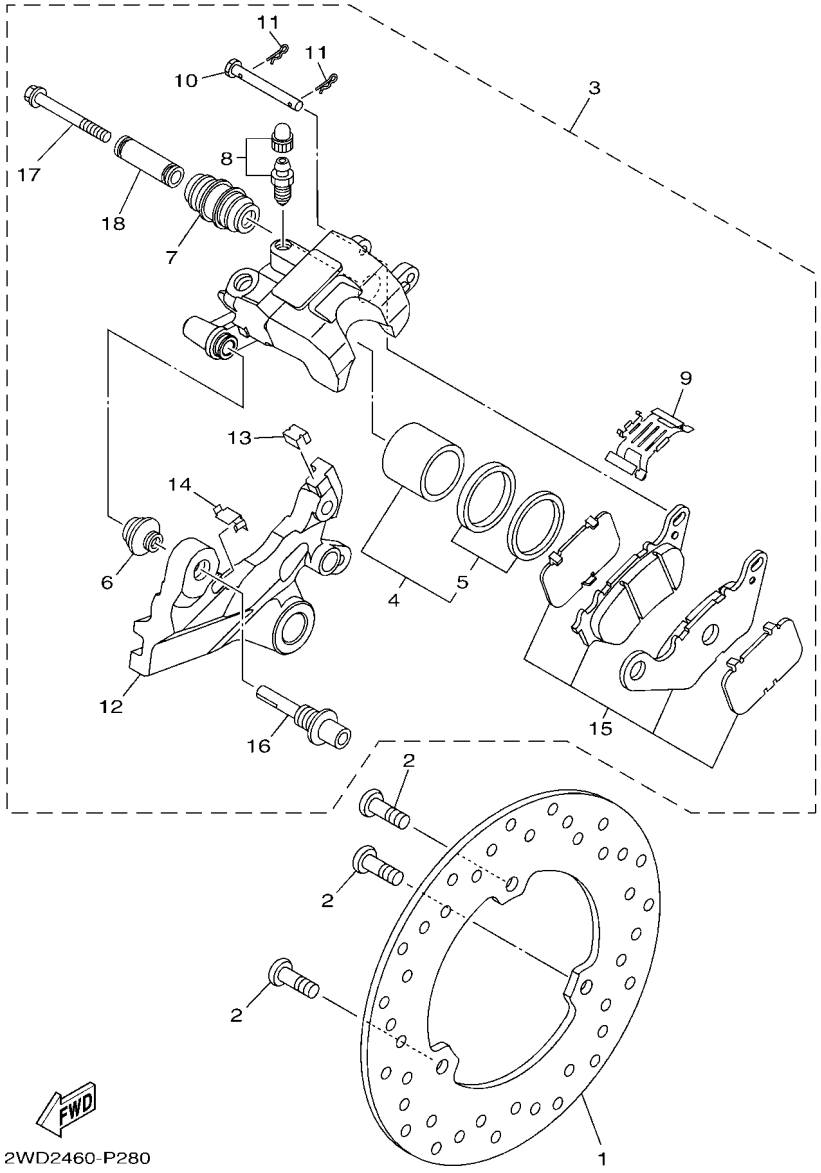


## FIG. 29 PINCA DE FREIO TRASEIRA

| REF. NO. | No. PEÇA | DESCRIÇÃO | B091 | | | | | OBSERVAÇÕES |
|---|---|---|---|---|---|---|---|---|
| 1 | 1WD–F582W–00 | DISCO DE FREIO TRAS. 2 | 1 | | | | | |
| 2 | 90111–08087 | PARAFUSO | 3 | | | | | |
| 3 | 2WD–F580W–00 | PINCA FREIO CONJ. TRASEIRO 2 | 1 | | | | | |
| 4 | 1WD–25802–50 | .JOGO DE PISTOES DA PINCA | 1 | | | | | |
| 5 | 1WD–25803–50 | ..JOGO DE RETENTORES DA PINCA | 1 | | | | | |
| 6 | 5YP–F5917–00 | .PROTETOR DA PINCA | 1 | | | | | |
| 7 | 34X–25937–00 | .CAPA DA PINCA DE FREIO | 1 | | | | | |
| 8 | 5YP–W0048–50 | .KIT DO PARAFUSO SANGRADOR | 1 | | | | | |
| 9 | 1WD–F5919–50 | .SUPORTE DA PASTILHA DE FREIO | 1 | | | | | |
| 10 | 1WD–F5924–50 | .PINO DA PASTILHA DE FREIO | 1 | | | | | |
| 11 | 5YP–F5925–01 | .PRESILHA | 2 | | | | | |
| 12 | 2WD–F5921–50 | .FIXADOR DO SUPORTE | 1 | | | | | |
| 13 | 1WD–F5939–51 | .PRESILHA DA PASTILHA | 1 | | | | | |
| 14 | 1WD–F5939–61 | .PRESILHA DA PASTILHA | 1 | | | | | |
| 15 | 1WD–25806–00 | .KIT DE PASTILHAS DE FREIO 2 | 1 | | | | | |
| 16 | 1WD–F5914–50 | .CONTRA PINO | 1 | | | | | |
| 17 | 5KN–25926–01 | .PARAFUSO | 1 | | | | | |
| 18 | 5TL–F5838–00 | .CAPA DA PINCA | 1 | | | | | |

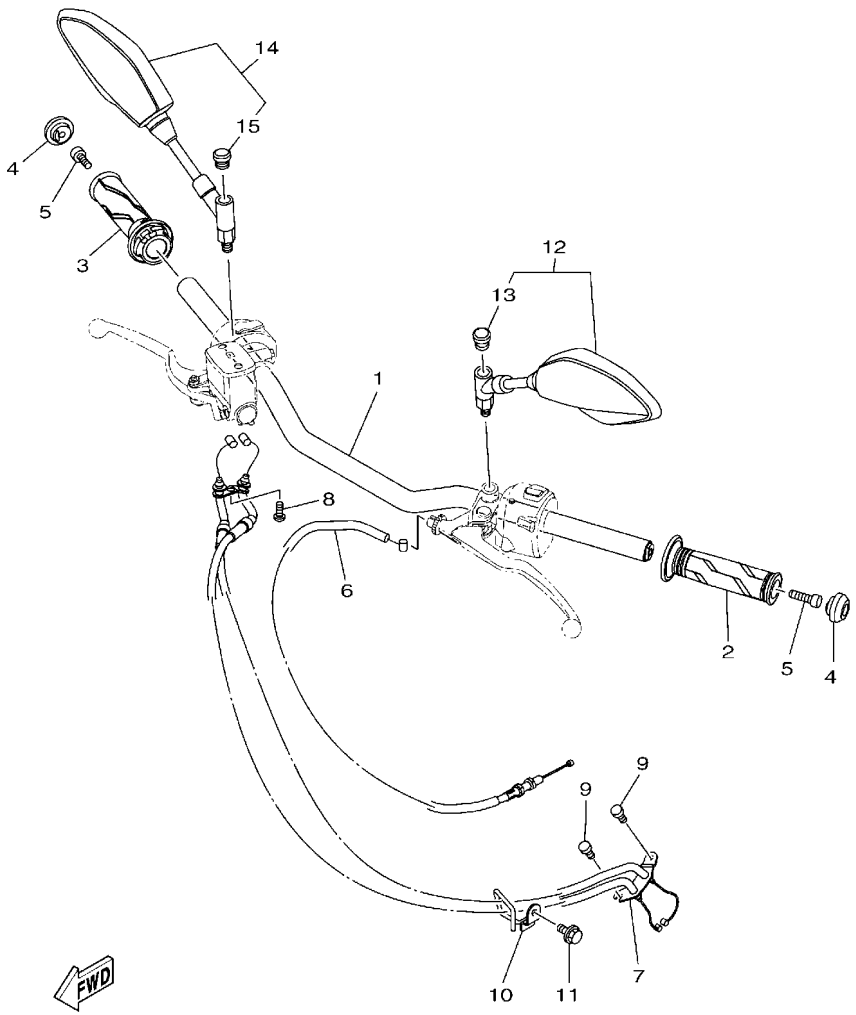


## FIG. 30 GUIDAO E CABOS

| REF. NO. | No. PEÇA | DESCRIÇÃO | B091 | | | | | OBSERVAÇÕES |
|---|---|---|---|---|---|---|---|---|
| 1 | B04–F6111–00 | GUIDAO | 1 | | | | | |
| 2 | B01–F6241–00 | MANOPLA ESQUERDA | 1 | | | | | |
| 3 | B01–F6240–00 | MANOPLA DIREITA CONJ. | 1 | | | | | |
| 4 | B01–F6246–00 | TERMINACAO DA MANOPLA | 2 | | | | | |
| 5 | 91317–06020 | PARAFUSO | 2 | | | | | |
| 6 | B04–F6335–00 | CABO DE EMBREAGEM | 1 | | | | | |
| 7 | B04–F6301–00 | CABO ACELERADOR CONJ. | 1 | | | | | |
| 8 | 98507–05012 | PARAFUSO CABECA PANELA | 1 | | | | | |
| 9 | 91312–05010 | PARAFUSO HEXAGONAL | 2 | | | | | |
| 10 | B04–F6315–00 | GUIA DO CABO | 1 | | | | | |
| 11 | 95802–06010 | PARAFUSO FLANGE | 1 | | | | | |
| 12 | B50–F6280–00 | ESPELHO RETROVISOR CONJ. (ESQ) | 1 | | | | | |
| 13 | 23P–26133–00 | .TAMPA | 1 | | | | | |
| 14 | B50–F6290–00 | ESPELHO RETROVISOR CONJ. (DIR) | 1 | | | | | |
| 15 | 23P–26133–00 | .TAMPA | 1 | | | | | |

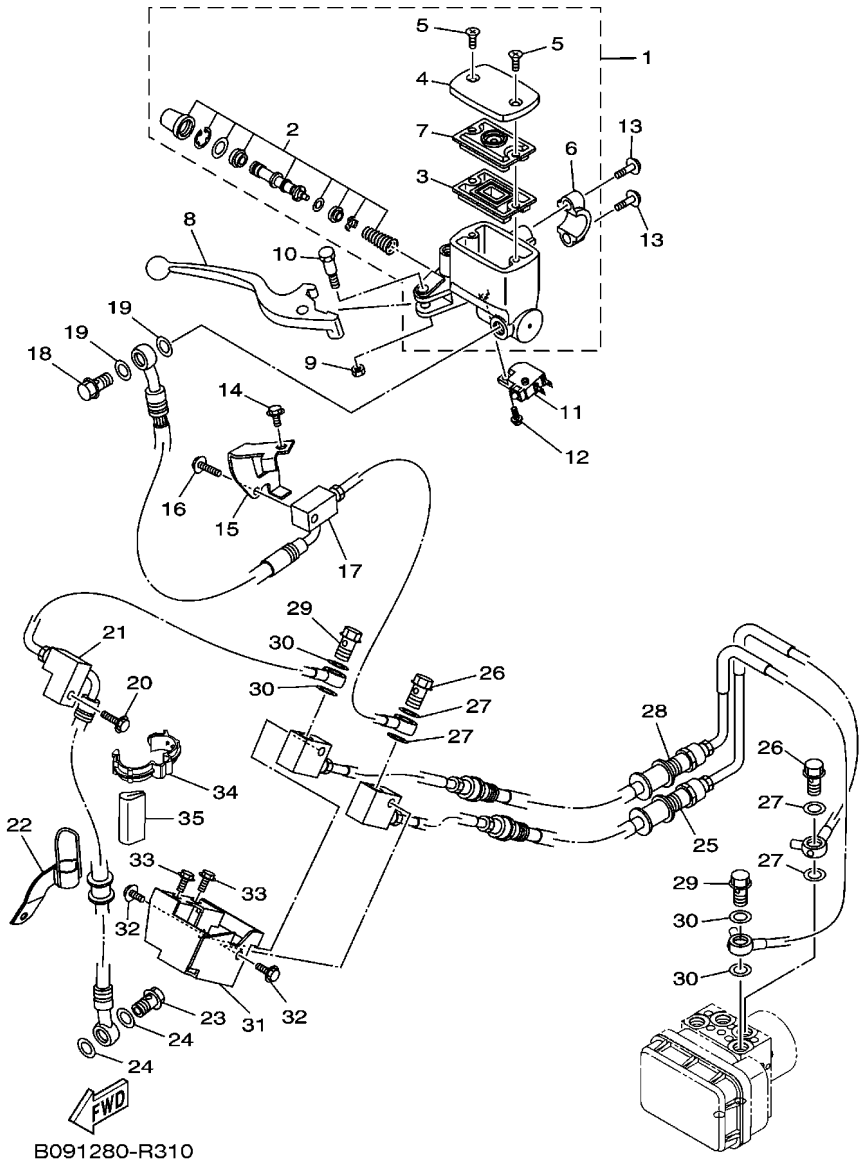


## FIG. 31 CILINDRO MESTRE DIANTEIRO

| REF. NO. | No. PEÇA | DESCRIÇÃO | B091 | | | | | OBSERVAÇÕES |
|---|---|---|---|---|---|---|---|---|
| 1 | 1WD–F5870–00 | CILINDRO MESTRE SUB CONJ. | 1 | | | | | |
| 2 | 1WD–F5807–00 | .KIT DE REPARO DO CILINDRO | 1 | | | | | |
| 3 | 5RB–25854–00 | .DIAFRAGMA DO RESERVATORIO | 1 | | | | | |
| 4 | 1WD–F5852–00 | .TAMPA DO RESERVATORIO | 1 | | | | | |
| 5 | 36Y–2589H–00 | .PARAFUSO | 2 | | | | | |
| 6 | 3RW–F5867–00 | .SUPORTE DO CILINDRO MESTRE | 1 | | | | | |
| 7 | 3C1–F5855–00 | .BUCHA DO DIAFRAGMA | 1 | | | | | |
| 8 | 1WD–H3922–00 | ALAVANCA DIREITA | 1 | | | | | |
| 9 | 95602–06100 | PORCA AUTOTRAVANTE (M6) | 1 | | | | | |
| 10 | 90109–06577 | PARAFUSO | 1 | | | | | |
| 11 | 2DP–H3980–00 | INTERRUPTOR DE FREIO DIANT. | 1 | | | | | |
| 12 | 97602–04212 | PARAFUSO CABECA DE PANELA | 1 | | | | | |
| 13 | 95027–06025 | PARAFUSO FLANGE | 2 | | | | | |
| 14 | 95812–06012 | PARAFUSO FLANGE | 1 | | | | | |
| 15 | 2WD–F588F–00 | SUPORTE MANGUEIRA DE FREIO 5 | 1 | | | | | |
| 16 | 95022–06020 | PARAFUSO FLANGE | 1 | | | | | |
| 17 | B08–F5872–00 | MANGUEIRA DE FREIO 1 | 1 | | | | | |
| 18 | 90401–10812 | PARAFUSO DE UNIAO | 1 | | | | | |
| 19 | 90201–10118 | ARRUELA PLANA | 2 | | | | | |
| 20 | 95022–06020 | PARAFUSO FLANGE | 1 | | | | | |
| 21 | B08–F581J–01 | MANGUEIRA DE FREIO 4 | 1 | | | | | |
| 22 | 2WD–F5876–00 | SUPORTE MANGUEIRA DE FREIO 2 | 1 | | | | | |
| 23 | 90401–10812 | PARAFUSO DE UNIAO | 1 | | | | | |
| 24 | 90201–10118 | ARRUELA PLANA | 2 | | | | | |
| 25 | 2WD–F5873–00 | MANGUEIRA DE FREIO 2 | 1 | | | | | |
| 26 | 90401–10812 | PARAFUSO DE UNIAO | 2 | | | | | |
| 27 | 90201–10118 | ARRUELA PLANA | 4 | | | | | |

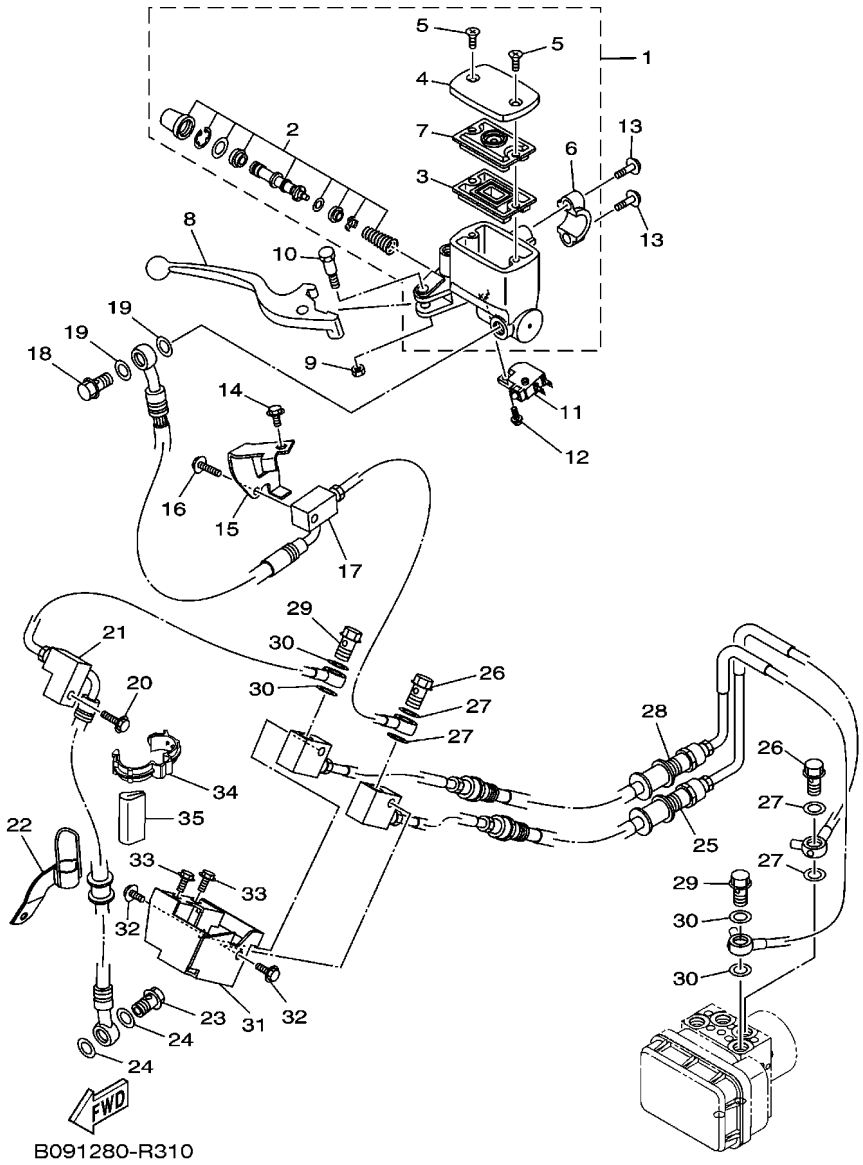


## FIG. 31 CILINDRO MESTRE DIANTEIRO

| REF. NO. | No. PEÇA | DESCRIÇÃO | B091 | | | | | OBSERVAÇÕES |
|---|---|---|---|---|---|---|---|---|
| 28 | 2WD–F5874–00 | MANGUEIRA DE FREIO | 1 | | | | | |
| 29 | 90401–10812 | PARAFUSO DE UNIAO | 2 | | | | | |
| 30 | 90201–10118 | ARRUELA PLANA | 4 | | | | | |
| 31 | 2WD–F588G–00 | SUPORTE MANGUEIRA DE FREIO 6 | 1 | | | | | |
| 32 | 95027–06012 | PARAFUSO FLANGE | 2 | | | | | |
| 33 | 95027–06012 | PARAFUSO FLANGE | 2 | | | | | |
| 34 | 90464–12013 | BRACADEIRA | 1 | | | | | |
| 35 | 34B–24785–00 | MOLDURA DE SELIM | 1 | | | | | |

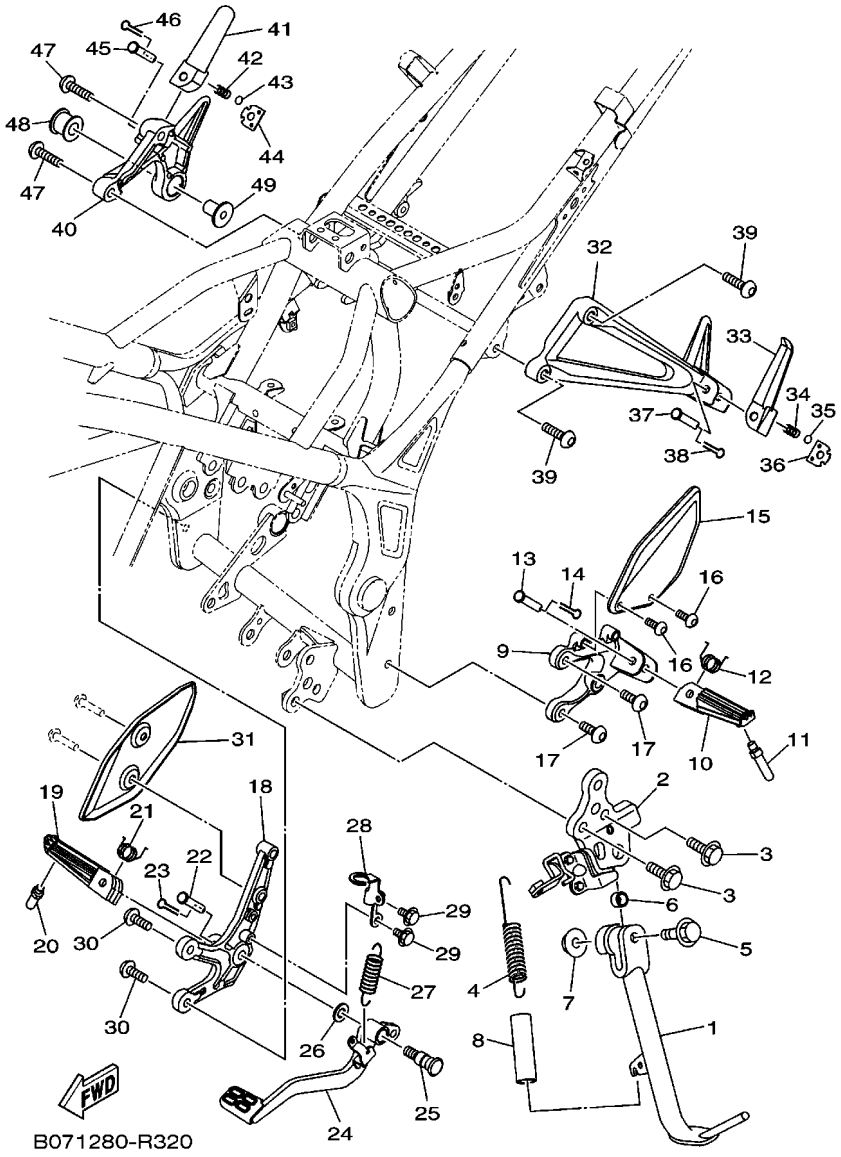


## FIG. 32 CAVALETE. ESTRIBOS. PEDAL

| REF. NO. | No. PEÇA | DESCRIÇÃO | B091 | | | | | OBSERVAÇÕES |
|---|---|---|---|---|---|---|---|---|
| 1 | 1WD–F7311–00 | CAVALETE LATERAL | 1 | | | | | |
| 2 | B04–F7321–00 | SUPORTE DO CAVALETE LATERAL | 1 | | | | | |
| 3 | 95817–10025 | PARAFUSO FLANGE | 2 | | | | | |
| 4 | 90506–23812 | MOLA DE TENSAO | 1 | | | | | |
| 5 | 90105–106A7 | PARAFUSO FLANGE | 1 | | | | | |
| 6 | 90387–10010 | ESPACADOR | 1 | | | | | |
| 7 | 95602–10200 | PORCA AUTOTRAVANTE | 1 | | | | | |
| 8 | 90445–217G3 | TUBO (L70) | 1 | | | | | |
| 9 | B01–F7442–00 | SUPORTE DO ESTRIBO 2 | 1 | | | | | |
| 10 | B01–F7451–00 | ESTRIBO ESQUERDO | 1 | | | | | |
| 11 | 1WD–F7435–00 | PARAFUSO | 1 | | | | | |
| 12 | 90508–183B9 | MOLA DE TORCAO | 1 | | | | | |
| 13 | 90240–08145 | PINO | 1 | | | | | |
| 14 | 91401–25015 | CONTRAPINO | 1 | | | | | |
| 15 | 2MS–F7445–00 | PLACA 1 | 1 | | | | | |
| 16 | 90111–06013 | PARAFUSO | 2 | | | | | |
| 17 | 90109–085G6 | PARAFUSO | 2 | | | | | |
| 18 | B01–F7443–00 | SUPORTE DO ESTRIBO 3 | 1 | | | | | |
| 19 | B01–F7461–00 | ESTRIBO DIREITO | 1 | | | | | |
| 20 | 1WD–F7435–00 | PARAFUSO | 1 | | | | | |
| 21 | 90508–183B9 | MOLA DE TORCAO | 1 | | | | | |
| 22 | 90240–08145 | PINO | 1 | | | | | |
| 23 | 91401–25015 | CONTRAPINO | 1 | | | | | |
| 24 | B01–F7211–00 | PEDAL DE FREIO | 1 | | | | | |
| 25 | 4BP–27261–00 | EIXO | 1 | | | | | |
| 26 | 90201–10021 | ARRUELA PLANA | 1 | | | | | |
| 27 | 90506–26807 | MOLA DE TENSAO | 1 | | | | | |

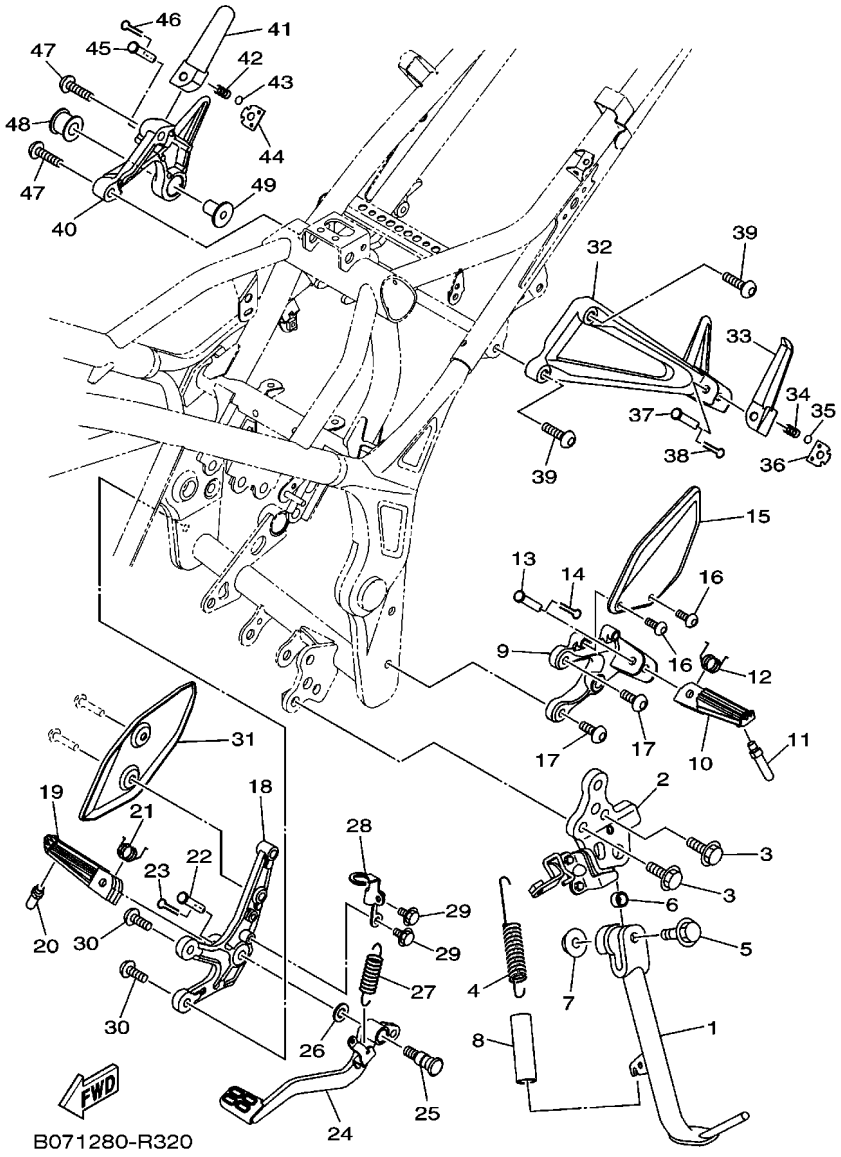


## FIG. 32 CAVALETE. ESTRIBOS. PEDAL

| REF. NO. | No. PEÇA | DESCRIÇÃO | B091 | | | | | OBSERVAÇÕES |
|---|---|---|---|---|---|---|---|---|
| 28 | B01–F144G–00 | FIXADOR DO INTERRUP. DE PARADA | 1 | | | | | |
| 29 | 95802–06010 | PARAFUSO FLANGE | 2 | | | | | |
| 30 | 90109–085G6 | PARAFUSO | 2 | | | | | |
| 31 | 2MS–F7446–00 | PLACA 2 | 1 | | | | | |
| 32 | 1WD–F741L–00 | SUPORTE DO ESTRIBO ESQ. | 1 | | | | | |
| 33 | 1WD–F7431–00 | ESTRIBO TRASEIRO ESQ. | 1 | | | | | |
| 34 | 90501–12743 | MOLA DE COMPRESSAO | 1 | | | | | |
| 35 | 93501–04830 | ESFERA | 1 | | | | | |
| 36 | 1WD–F7437–00 | ARRUELA ESPECIAL | 1 | | | | | |
| 37 | 90240–08145 | PINO | 1 | | | | | |
| 38 | 91401–25015 | CONTRAPINO | 1 | | | | | |
| 39 | 90110–08071 | PARAFUSO HEXAGONAL INTERNO | 2 | | | | | |
| 40 | 1WD–F742L–00 | SUPORTE DO ESTRIBO DIR. | 1 | | | | | |
| 41 | 1WD–F7441–00 | ESTRIBO TRASEIRO DIR. | 1 | | | | | |
| 42 | 90501–12743 | MOLA DE COMPRESSAO | 1 | | | | | |
| 43 | 93501–04830 | ESFERA | 2 | | | | | |
| 44 | 1WD–F7437–00 | ARRUELA ESPECIAL | 1 | | | | | |
| 45 | 90240–08145 | PINO | 1 | | | | | |
| 46 | 91401–25015 | CONTRAPINO | 1 | | | | | |
| 47 | 90110–08071 | PARAFUSO HEXAGONAL INTERNO | 2 | | | | | |
| 48 | 5TP–E4747–00 | AMORTIZADOR DO SILENCIADOR | 1 | | | | | |
| 49 | 90387–08813 | ESPACADOR | 1 | | | | | |

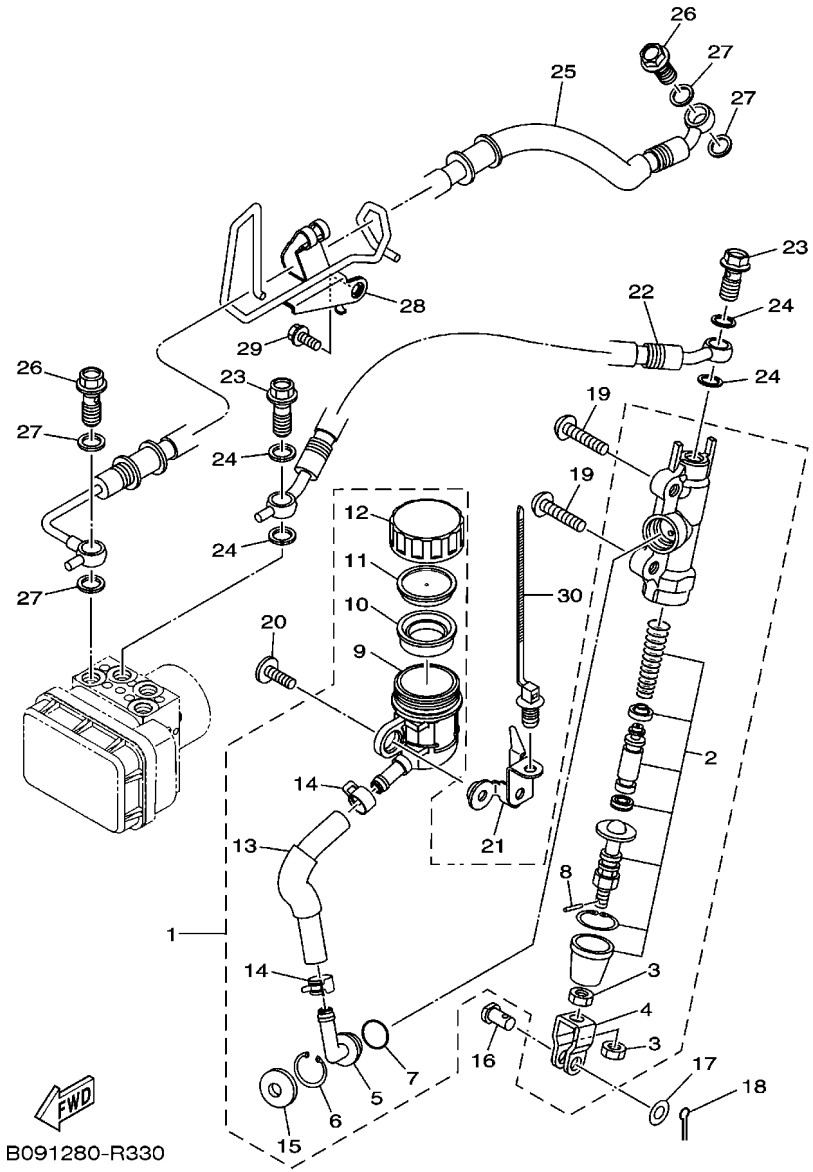


## FIG. 33 CILINDRO MESTRE TRASEIRO

| REF. NO. | No. PEÇA | DESCRIÇÃO | B091 | | | | | OBSERVAÇÕES |
|---|---|---|---|---|---|---|---|---|
| 1 | 1WD–F580E–00 | CILINDRO MESTRE TRASEIRO CONJ. | 1 | | | | | |
| 2 | 1WD–F5808–00 | .KIT DE REPARO, CILINDRO MESTRE | 1 | | | | | |
| 3 | 4SS–27218–00 | .PORCA | 2 | | | | | |
| 4 | 50C–F7222–00 | .JUNCAO | 1 | | | | | |
| 5 | 50C–F582A–50 | .JUNCAO | 1 | | | | | |
| 6 | 50C–F5866–00 | .ANEL TRAVA | 1 | | | | | |
| 7 | 93210–15620 | .ANEL DE BORRACHA | 1 | | | | | |
| 8 | 3KW–27234–00 | .PINO DA VARETA DE FREIO | 1 | | | | | |
| 9 | 50C–F5894–10 | .TANQUE RESERVATORIO | 1 | | | | | |
| 10 | 2VN–F5854–00 | .DIAFRAGMA DO RESERVATORIO | 1 | | | | | |
| 11 | 50C–F5855–00 | .BUCHA DO DIAFRAGMA | 1 | | | | | |
| 12 | 1WD–F5852–50 | .TAMPA DO RESERVATORIO | 1 | | | | | |
| 13 | 1WD–F5895–50 | .MANGUEIRA DO RESERVATORIO | 1 | | | | | |
| 14 | 90467–12085 | .PRESILHA | 2 | | | | | |
| 15 | 50C–F589A–00 | .PROTETOR DE POEIRA | 1 | | | | | |
| 16 | 90240–08124 | PINO | 1 | | | | | |
| 17 | 90201–08083 | ARRUELA PLANA | 1 | | | | | |
| 18 | 91401–20012 | CONTRAPINO | 1 | | | | | |
| 19 | 92012–08030 | PARAFUSO | 2 | | | | | |
| 20 | 90111–06121 | PARAFUSO | 1 | | | | | |
| 21 | B04–F582E–00 | SUPORTE DO TANQUE RESERVA | 1 | | | | | |
| 22 | 2WD–F581K–00 | MANGUEIRA DE FREIO 5 | 1 | | | | | |
| 23 | 90401–10812 | PARAFUSO DE UNIAO | 2 | | | | | |
| 24 | 90201–10118 | ARRUELA PLANA | 4 | | | | | |
| 25 | 2WD–F582J–00 | MANGUEIRA DO FREIO 6 | 1 | | | | | |
| 26 | 90401–10812 | PARAFUSO DE UNIAO | 2 | | | | | |
| 27 | 90201–10118 | ARRUELA PLANA | 4 | | | | | |

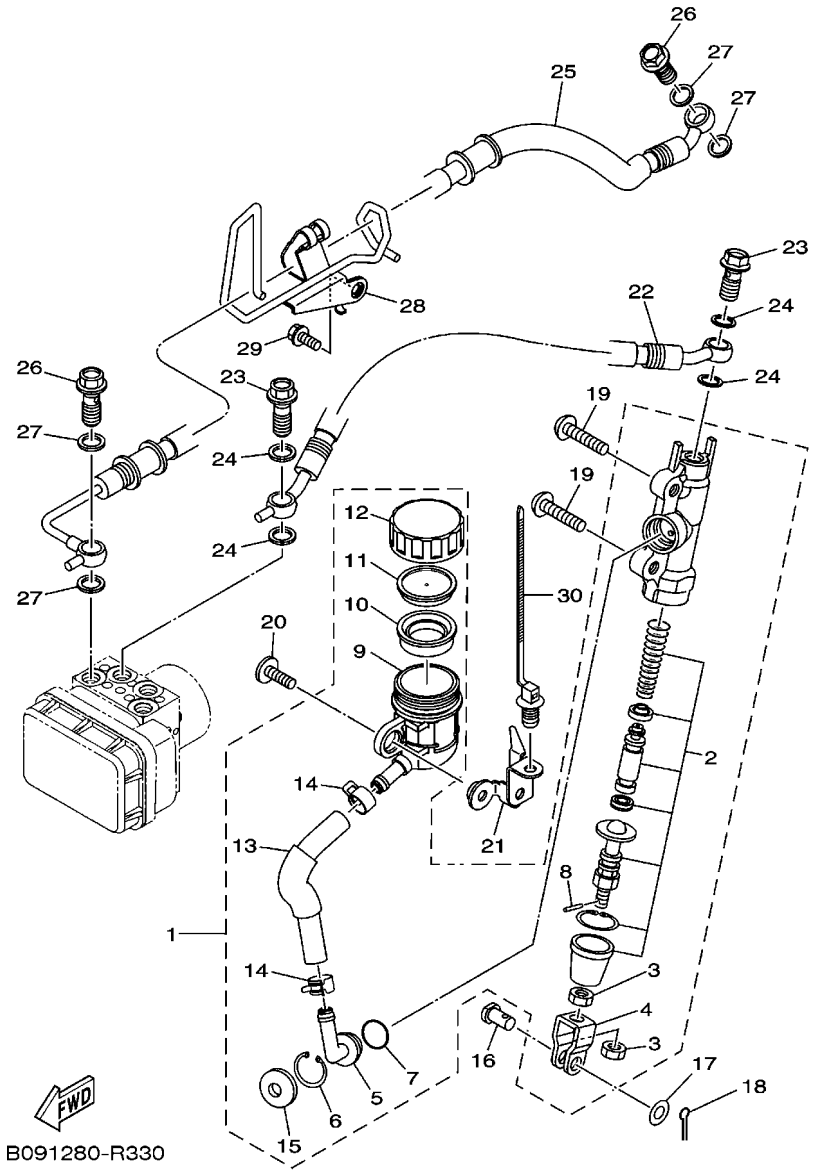


## FIG. 33 CILINDRO MESTRE TRASEIRO

| REF. NO. | No. PEÇA | DESCRIÇÃO | B091 | | | | | OBSERVAÇÕES |
|---|---|---|---|---|---|---|---|---|
| 28 | 2WD–F5887–00 | SUPORTE DA MANGUEIRA DE FREIO | 1 | | | | | |
| 29 | 95827–06014 | PARAFUSO FLANGE | 1 | | | | | |
| 30 | 90464–30009 | BRACADEIRA | 1 | | | | | |

## FIG. 34 GERADOR

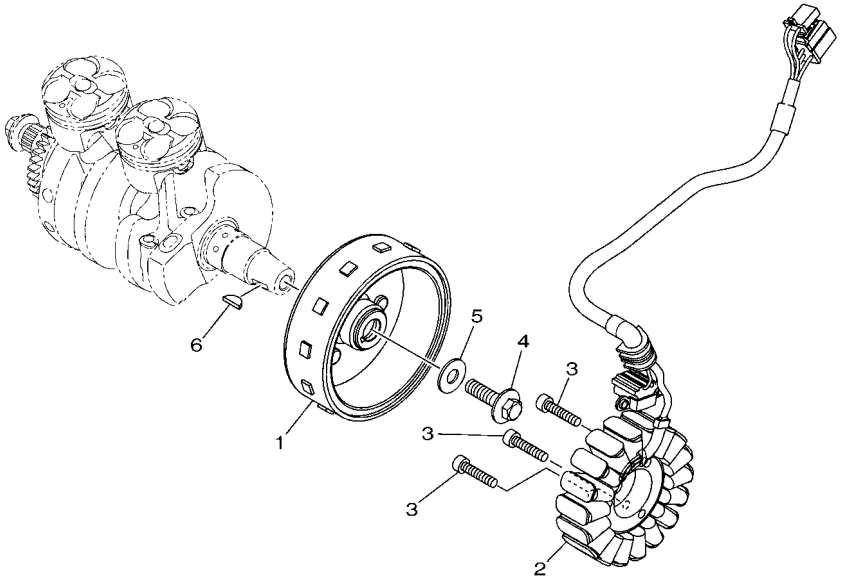

B041460-R340

| REF. NO. | No. PEÇA | DESCRIÇÃO | B091 | | | | | OBSERVAÇÕES |
|---|---|---|---|---|---|---|---|---|
| 1 | 1WD–H1450–00 | ROTOR DO MAGNETO CONJ. | 1 | | | | | |
| 2 | 1WD–H1410–01 | ESTATOR CONJ. | 1 | | | | | |
| 3 | 91312–06030 | PARAFUSO HEXAGONAL | 3 | | | | | |
| 4 | 90105–10883 | PARAFUSO FLANGE | 1 | | | | | |
| 5 | 90201–102R1 | ARRUELA PLANA | 1 | | | | | |
| 6 | 90280–05013 | CHAVETA MEIA LUA | 1 | | | | | |

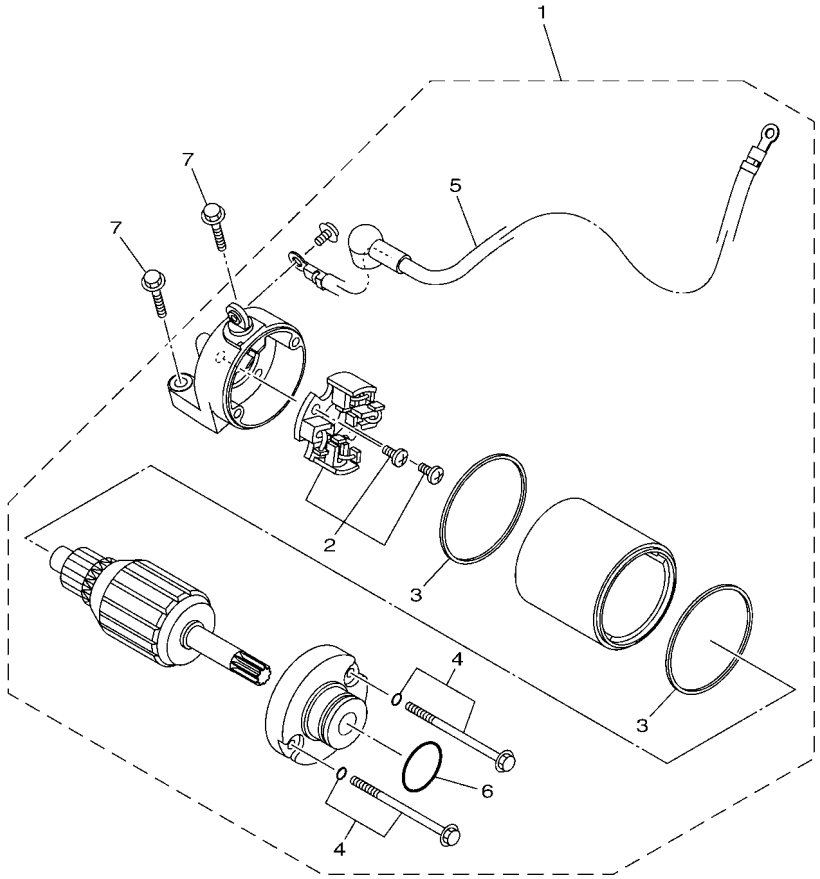


1WD1460-P360

## FIG. 35 MOTOR DE PARTIDA

| REF. NO. | No. PEÇA | DESCRIÇÃO | B091 | | | | | OBSERVAÇÕES |
|---|---|---|---|---|---|---|---|---|
| 1 | 1WD–H1800–00 | MOTOR DE PARTIDA COMPLETO | 1 | | | | | |
| 2 | 1WD–H1801–00 | .JOGO DE ESCOVAS | 1 | | | | | |
| 3 | 1WD–H1861–00 | .GAXETA | 2 | | | | | |
| 4 | 1WD–H1828–00 | .PARAFUSO 2 | 2 | | | | | |
| 5 | 1WD–H183G–00 | .CHICOTE DO MOTOR COMPL. | 1 | | | | | |
| 6 | 4FP–H182L–00 | .ANEL DE BORRACHA | 1 | | | | | |
| 7 | 95022–06025 | PARAFUSO FLANGE | 2 | | | | | |

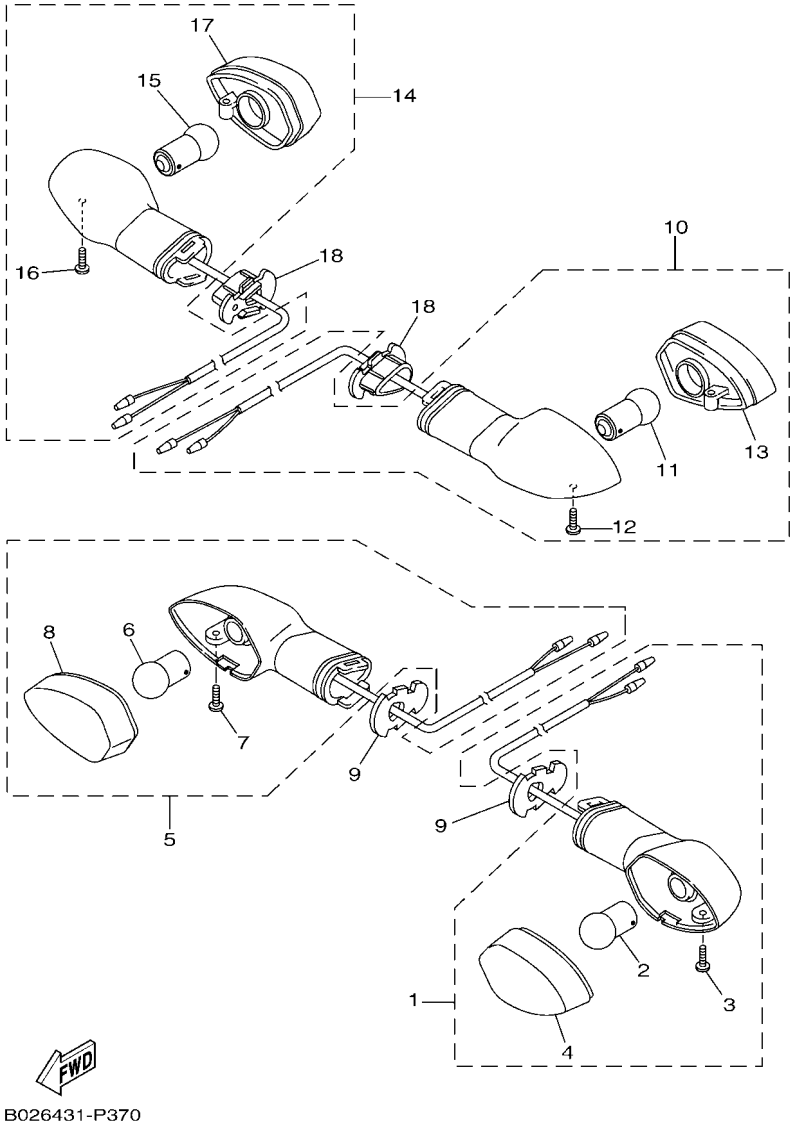


## FIG. 36 PISCAS

| REF. NO. | No. PEÇA | DESCRIÇÃO | B091 | | | | | OBSERVAÇÕES |
|---|---|---|---|---|---|---|---|---|
| 1 | B04–H3310–10 | PISCA DIANTEIRO CONJ. 1 | 1 | | | | | |
| 2 | 1KB–83311–00 | .LAMPADA DO PISCA (12V-10W) | 1 | | | | | |
| 3 | 3D9–H3333–10 | .PARAFUSO DE FIXACAO DA LENTE | 1 | | | | | |
| 4 | 1KB–8333A–00 | .LENTE COMPLETA 1 | 1 | | | | | |
| 5 | B04–H3320–10 | PISCA DIANTEIRO CONJ. 2 | 1 | | | | | |
| 6 | 1KB–83311–00 | .LAMPADA DO PISCA (12V-10W) | 1 | | | | | |
| 7 | 3D9–H3333–10 | .PARAFUSO DE FIXACAO DA LENTE | 1 | | | | | |
| 8 | 1KB–8334A–00 | .LENTE COMPLETA 2 | 1 | | | | | |
| 9 | BD6–H3318–10 | SUPORTE DO PISCA 1 | 2 | | | | | |
| 10 | 1WD–H3330–10 | PISCA TRASEIRO CONJ. 1 | 1 | | | | | |
| 11 | 1KB–83311–00 | .LAMPADA DO PISCA (12V-10W) | 1 | | | | | |
| 12 | 3D9–H3333–10 | .PARAFUSO DE FIXACAO DA LENTE | 1 | | | | | |
| 13 | 1KB–8334A–00 | .LENTE COMPLETA 2 | 1 | | | | | |
| 14 | 1WD–H3340–10 | PISCA TRASEIRO CONJ. 2 | 1 | | | | | |
| 15 | 1KB–83311–00 | .LAMPADA DO PISCA (12V-10W) | 1 | | | | | |
| 16 | 3D9–H3333–10 | .PARAFUSO DE FIXACAO DA LENTE | 1 | | | | | |
| 17 | 1KB–8333A–00 | .LENTE COMPLETA 1 | 1 | | | | | |
| 18 | 1WD–H3318–00 | SUPORTE DO PISCA 1 | 2 | | | | | |

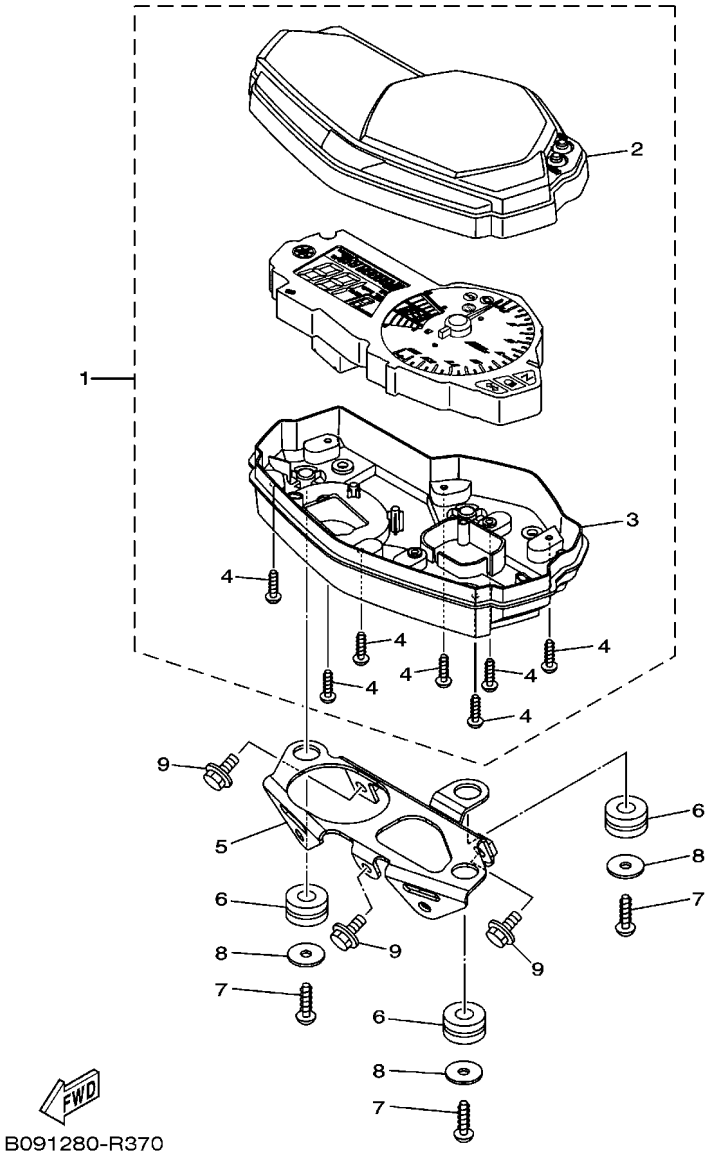


## FIG. 37 MEDIDOR

| REF. NO. | No. PEÇA | DESCRIÇÃO | B091 | | | | | OBSERVAÇÕES |
|---|---|---|---|---|---|---|---|---|
| 1 | B02–H3500–00 | MEDIDOR CONJUNTO | 1 | | | | | |
| 2 | 1WD–H3571–00 | .CAIXA SUPERIOR DO VELOCIMETRO | 1 | | | | | |
| 3 | 1WD–H3572–00 | .CAIXA INFERIOR DO VELOCIMETRO | 1 | | | | | |
| 4 | 97702–30016 | .PARAFUSO | 7 | | | | | |
| 5 | B04–H3519–00 | SUPORTE DO MEDIDOR | 1 | | | | | |
| 6 | 90480–14004 | ILHO DE BORRACHA | 3 | | | | | |
| 7 | 97702–50016 | PARAFUSO | 3 | | | | | |
| 8 | 90201–05827 | ARRUELA PLANA | 3 | | | | | |
| 9 | 95022–06010 | PARAFUSO FLANGE | 3 | | | | | |

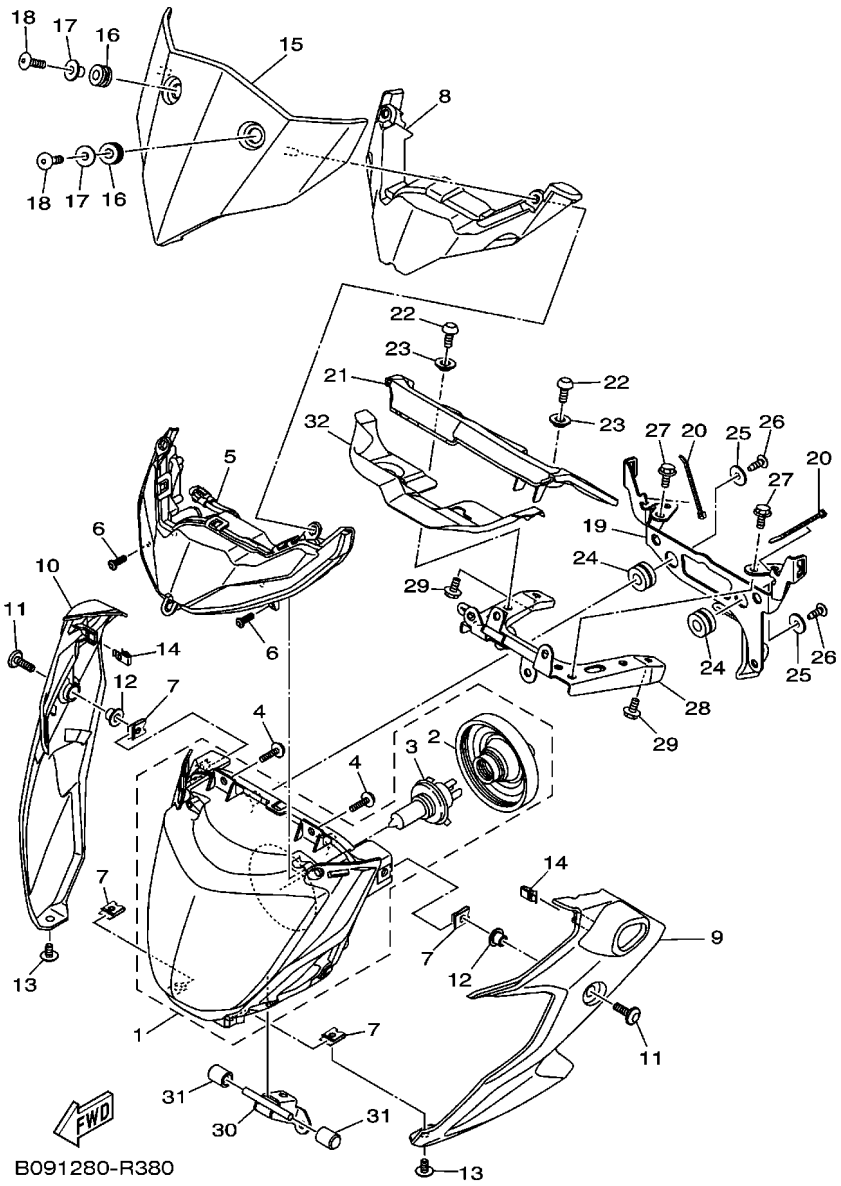


## FIG. 38 FAROL DIANTEIRO

| REF. NO. | No. PEÇA | DESCRIÇÃO | B091 | | | | | OBSERVAÇÕES |
|---|---|---|---|---|---|---|---|---|
| 1 | B04–H4310–00 | FAROL DIANTEIRO COMPLETO | 1 | | | | | |
| 2 | 1RC–84397–00 | .TAMPA DO SOQUETE | 1 | | | | | |
| 3 | 1RC–84314–00 | .LAMPADA DO FAROL (12V-60/55W) | 1 | | | | | |
| 4 | B04–84192–00 | PARAFUSO ESPECIAL | 4 | | | | | |
| 5 | B04–H4410–00 | TAMPA DO FAROL | 1 | | | | | |
| 6 | B04–E2614–00 | PARAFUSO | 2 | | | | | |
| 7 | 90183–06069 | PORCA MOLA | 4 | | | | | |
| 8 | B04–H4144–00 | TAMPA FAROL | 1 | | | | | |
| 9 | B04–F831V–00–P0 | FIXADOR DO FAROL 1 | 1 | | | | | MBL2 PARA MS1,SMX |
| | B04–F831V–00–P1 | FIXADOR DO FAROL 1 | 1 | | | | | RM7 |
| 10 | B04–F832V–00–P0 | FIXADOR DO FAROL 2 | 1 | | | | | MBL2 PARA MS1,SMX |
| | B04–F832V–00–P1 | FIXADOR DO FAROL 2 | 1 | | | | | RM7 |
| 11 | 90111–06140 | PARAFUSO | 2 | | | | | |
| 12 | 90387–068L9 | ESPACADOR | 2 | | | | | |
| 13 | 90111–06096 | PARAFUSO | 2 | | | | | |
| 14 | 5GM–28379–01 | GANCHO | 2 | | | | | |
| 15 | B04–H4369–00–P0 | TAMPA 1 | 1 | | | | | SMX |
| 16 | 90480–12808 | ILHO DE BORRACHA | 2 | | | | | |
| 17 | 90387–06899 | ESPACADOR | 2 | | | | | |
| 18 | 90111–06086 | PARAFUSO | 2 | | | | | |
| 19 | B04–F8357–00 | FIXADOR 2 | 1 | | | | | |
| 20 | 90464–16019 | BRACADEIRA | 2 | | | | | |
| 21 | B04–F8345–00 | MOLDURA 1 | 1 | | | | | |
| 22 | 90111–06029 | PARAFUSO | 2 | | | | | |
| 23 | 90387–07717 | ESPACADOR | 2 | | | | | |
| 24 | 90480–14004 | ILHO DE BORRACHA | 2 | | | | | |
| 25 | 90201–05036 | ARRUELA PLANA | 2 | | | | | |

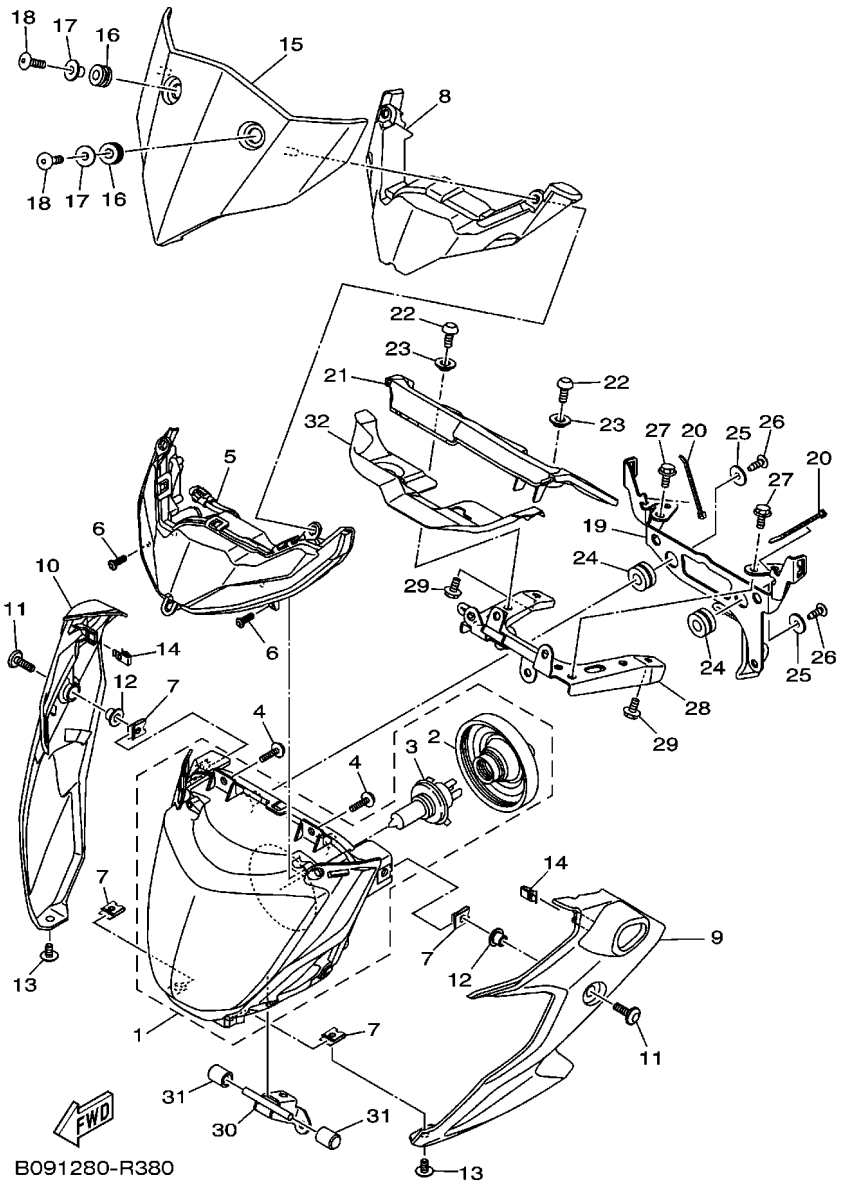


## FIG. 38 FAROL DIANTEIRO

| REF. NO. | No. PEÇA | DESCRIÇÃO | B091 | | | | | OBSERVAÇÕES |
|---|---|---|---|---|---|---|---|---|
| 26 | 97707–50016 | PARAFUSO | 2 | | | | | |
| 27 | 95802–06010 | PARAFUSO FLANGE | 2 | | | | | |
| 28 | B04–F8356–00 | FIXADOR 1 | 1 | | | | | |
| 29 | 95022–06010 | PARAFUSO FLANGE | 2 | | | | | |
| 30 | B08–F334G–00 | SUPORTE 1 | 1 | | | | | |
| 31 | 2SN–H4527–00 | AMORTIZADOR | 2 | | | | | |
| 32 | B04–H4196–00 | TAMPA DO SOQUETE | 1 | | | | | |

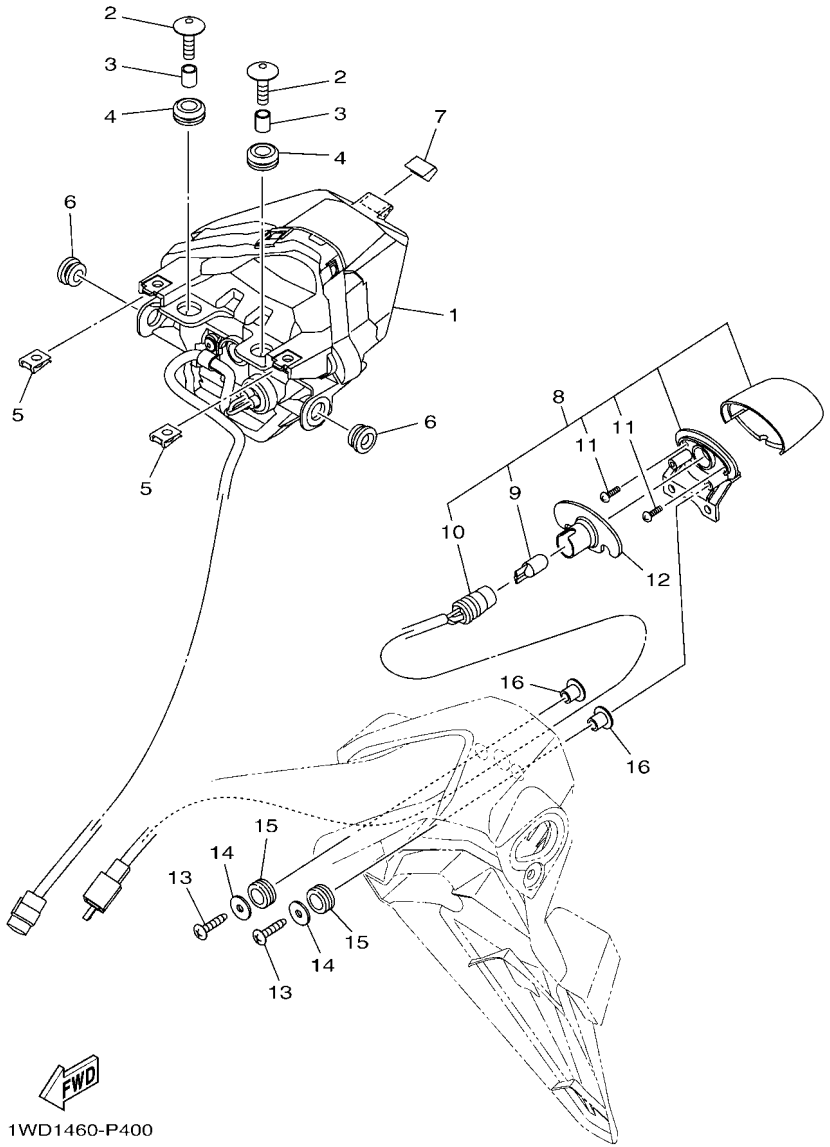


## FIG. 39 LANTERNA TRASEIRA

| REF. NO. | No. PEÇA | DESCRIÇÃO | B091 | | | | | OBSERVAÇÕES |
|---|---|---|---|---|---|---|---|---|
| 1 | 1WD–H4710–01 | LANTERNA TRASEIRA COMPLETA | 1 | | | | | |
| 2 | 90111–06117 | PARAFUSO | 2 | | | | | |
| 3 | 90387–067V1 | ESPACADOR | 2 | | | | | |
| 4 | 90480–13001 | ILHO DE BORRACHA | 2 | | | | | |
| 5 | 90183–05807 | PORCA MOLA | 2 | | | | | |
| 6 | 90480–10003 | ILHO DE BORRACHA | 2 | | | | | |
| 7 | 1WD–F1732–00 | VEDACAO 1 | 1 | | | | | |
| 8 | 1WD–H4740–00 | LUZ DA LICENCA CONJUNTO | 1 | | | | | |
| 9 | 1WD–H4744–00 | .LAMPADA (12V-5W) | 1 | | | | | |
| 10 | 1WD–H4547–00 | .CHICOTE DA LUZ DE LICENCA | 1 | | | | | |
| 11 | 1WD–H4726–00 | .PARAFUSO | 2 | | | | | |
| 12 | 1WD–H4753–00 | AMORTIZADOR | 1 | | | | | |
| 13 | 97707–40020 | PARAFUSO | 2 | | | | | |
| 14 | 90201–04804 | ARRUELA PLANA | 2 | | | | | |
| 15 | 90480–11009 | ILHO DE BORRACHA | 2 | | | | | |
| 16 | 90387–05042 | ESPACADOR | 2 | | | | | |

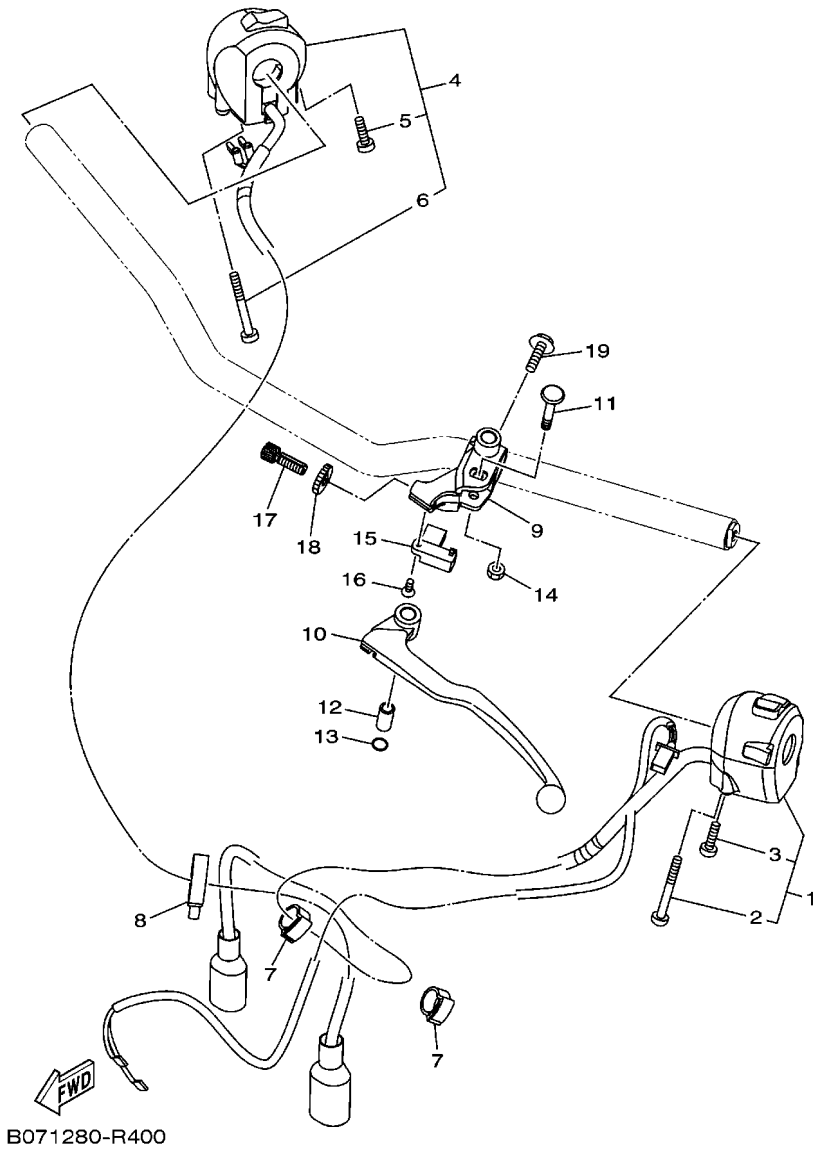


## FIG. 40 INTERRUP. DO GUIDAO E MANETE 1

| REF. NO. | No. PEÇA | DESCRIÇÃO | B091 | | | | | OBSERVAÇÕES |
|---|---|---|---|---|---|---|---|---|
| 1 | B04–H3972–00 | INTERRUPTOR DO GUIDAO 4 | 1 | | | | | |
| 2 | 45P–H395W–00 | .PARAFUSO | 1 | | | | | |
| 3 | 45P–H395X–00 | .PARAFUSO 1 | 1 | | | | | |
| 4 | B04–H3975–00 | INTERRUPTOR DO GUIDAO 2 | 1 | | | | | |
| 5 | 45P–H2133–00 | .PARAFUSO FIXADOR | 1 | | | | | |
| 6 | 45P–H395W–00 | .PARAFUSO | 1 | | | | | |
| 7 | 90464–16003 | BRACADEIRA | 2 | | | | | |
| 8 | 90464–30001 | BRACADEIRA | 1 | | | | | |
| 9 | 1WD–H2911–00 | FIXADOR DA ALAVANCA 1 | 1 | | | | | |
| 10 | 1WD–H3912–00 | ALAVANCA ESQUERDA 1 | 1 | | | | | |
| 11 | 31A–83945–00 | PARAFUSO DA ALAVANCA | 1 | | | | | |
| 12 | 31A–83913–00 | ESPACADOR DA ALAVANCA 1 | 1 | | | | | |
| 13 | 93210–108H5 | ANEL DE BORRACHA | 1 | | | | | |
| 14 | 95602–06100 | PORCA AUTOTRAVANTE (M6) | 1 | | | | | |
| 15 | 5BP–H2917–00 | INTERRUPTOR | 1 | | | | | |
| 16 | 90151–03005 | PARAFUSO TRAMBULADOR | 1 | | | | | |
| 17 | 90123–08083 | PARAFUSO | 1 | | | | | |
| 18 | 90179–08316 | PORCA | 1 | | | | | |
| 19 | 97507–06525 | PARAFUSO COM ARRUELA | 1 | | | | | |

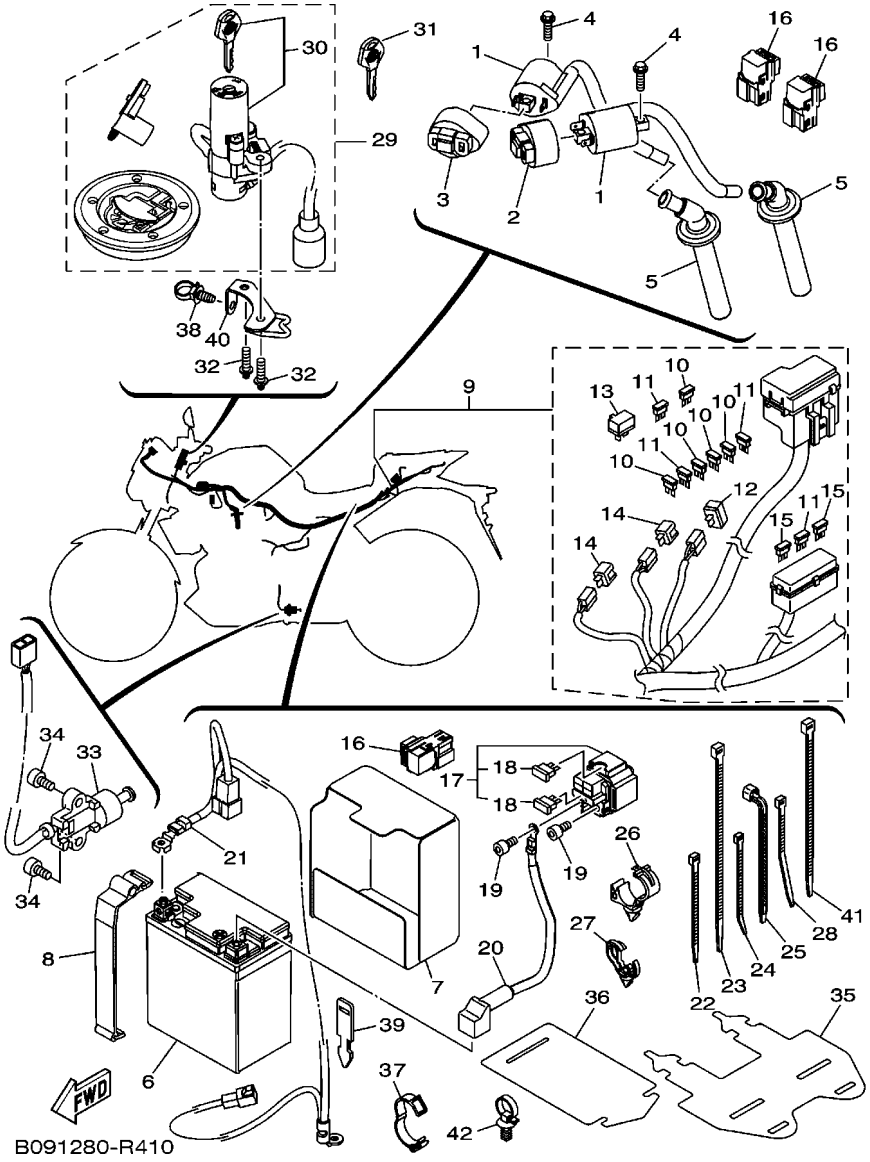


## FIG. 41 SISTEMA ELETRICO 1

| REF. NO. | No. PEÇA | DESCRIÇÃO | B091 | | | | | OBSERVAÇÕES |
|---|---|---|---|---|---|---|---|---|
| 1 | 1WD–H2310–00 | BOBINA DE IGNICAO CONJ. | 2 | | | | | |
| 2 | B04–H2314–00 | CAPA BOBINA DE IGNICAO | 1 | | | | | |
| 3 | B04–H2314–10 | CAPA BOBINA DE IGNICAO | 1 | | | | | |
| 4 | 95022–06020 | PARAFUSO FLANGE | 2 | | | | | |
| 5 | 1WD–H2370–00 | CACHIMBO DA VELA CONJ. | 2 | | | | | |
| 6 | 44C–H2100–02 | BATERIA CONJ. | 1 | | | | | |
| 7 | 1WD–H2121–00 | AMORTIZADOR DA BATERIA | 1 | | | | | |
| 8 | B01–H2131–00 | CINTA DA BATERIA | 1 | | | | | |
| 9 | B08–H2590–00 | CHICOTE PRINCIPAL COMPLETO | 1 | | | | | |
| 10 | 1WD–H2151–20 | .FUSIVEL (7.5A BL) | 5 | | | | | |
| 11 | 1WD–H2151–10 | .FUSIVEL (15A-BL) | 4 | | | | | |
| 12 | 4WA–81980–00 | .DIODO CONJUNTO | 1 | | | | | |
| 13 | 4B4–H1980–00 | .DIODO CONJUNTO | 1 | | | | | |
| 14 | 3WP–81980–00 | .DIODO CONJUNTO | 2 | | | | | |
| 15 | 1WD–H2151–30 | .FUSIVEL (30A) | 2 | | | | | |
| 16 | 1WD–H1950–00 | RELE CONJUNTO | 4 | | | | | |
| 17 | 1WD–H1940–00 | RELE DE PARTIDA CONJUNTO | 1 | | | | | |
| 18 | 1WD–H2151–00 | .FUSIVEL (30A-BL) | 2 | | | | | |
| 19 | 91312–05008 | PARAFUSO HEXAGONAL | 2 | | | | | |
| 20 | 2WD–H2115–00 | FIO POSITIVO DA BATERIA | 1 | | | | | |
| 21 | 2WD–H2116–01 | FIO NEGATIVO DA BATERIA | 1 | | | | | |
| 22 | 90464–36800 | BRACADEIRA | 2 | | | | | |
| 23 | 90464–70800 | BRACADEIRA | 6 | | | | | |
| 24 | 90464–22800 | BRACADEIRA | 1 | | | | | |
| 25 | 90464–15195 | BRACADEIRA | 2 | | | | | |
| 26 | 90464–20010 | BRACADEIRA | 1 | | | | | |
| 27 | 90464–13249 | BRACADEIRA | 1 | | | | | |

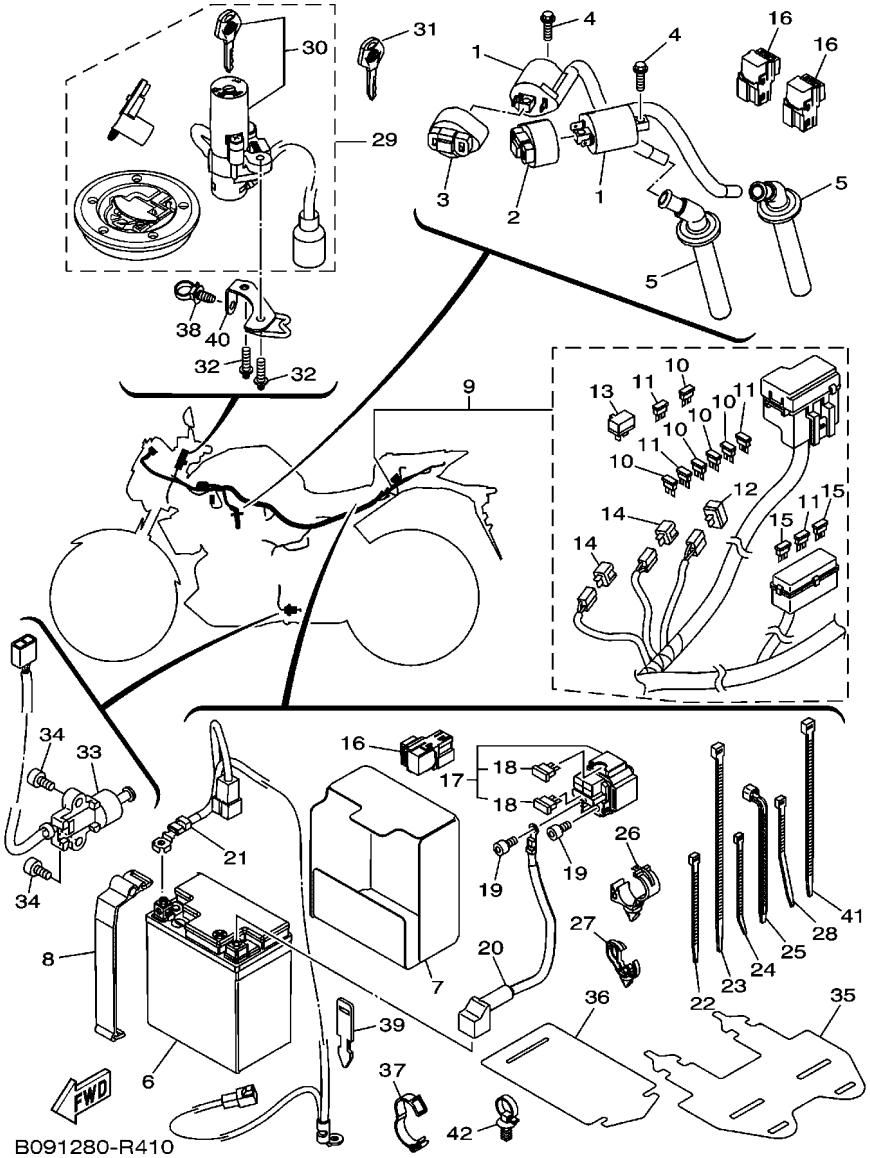


## FIG. 41 SISTEMA ELETRICO 1

| REF. NO. | No. PEÇA | DESCRIÇÃO | B091 | | | | | OBSERVAÇÕES |
|---|---|---|---|---|---|---|---|---|
| 28 | 90464–36005 | BRACADEIRA | 3 | | | | | |
| 29 | B04–XH250–00 | CONJUNTO DE TRAVAS COMPLETO | 1 | | | | | |
| 30 | B04–H2501–00 | TRAVA DE DIRECAO, INTERRUPTOR | 1 | | | | | |
| 31 | 1WD–H250A–00 | CHAVE VIRGEM | 1 | | | | | AP |
| 32 | 90109–060G4 | PARAFUSO | 2 | | | | | |
| 33 | 1WD–H2566–00 | INTERRUPTOR CAVALETE LATERAL | 1 | | | | | |
| 34 | 90110–05810 | PARAFUSO HEXAGONAL INTERNO | 2 | | | | | |
| 35 | 1WD–F179E–00 | CINTA | 1 | | | | | |
| 36 | 1WD–H2591–00 | BRACADEIRA | 1 | | | | | |
| 37 | 90464–26001 | BRACADEIRA | 1 | | | | | |
| 38 | 90464–08009 | BRACADEIRA | 1 | | | | | |
| 39 | 5YU–82591–00 | BRACADEIRA | 1 | | | | | |
| 40 | B04–F8358–00 | FIXADOR 3 | 1 | | | | | |
| 41 | 90464–50800 | BRACADEIRA | 1 | | | | | |
| 42 | 90464–30009 | BRACADEIRA | 1 | | | | | |

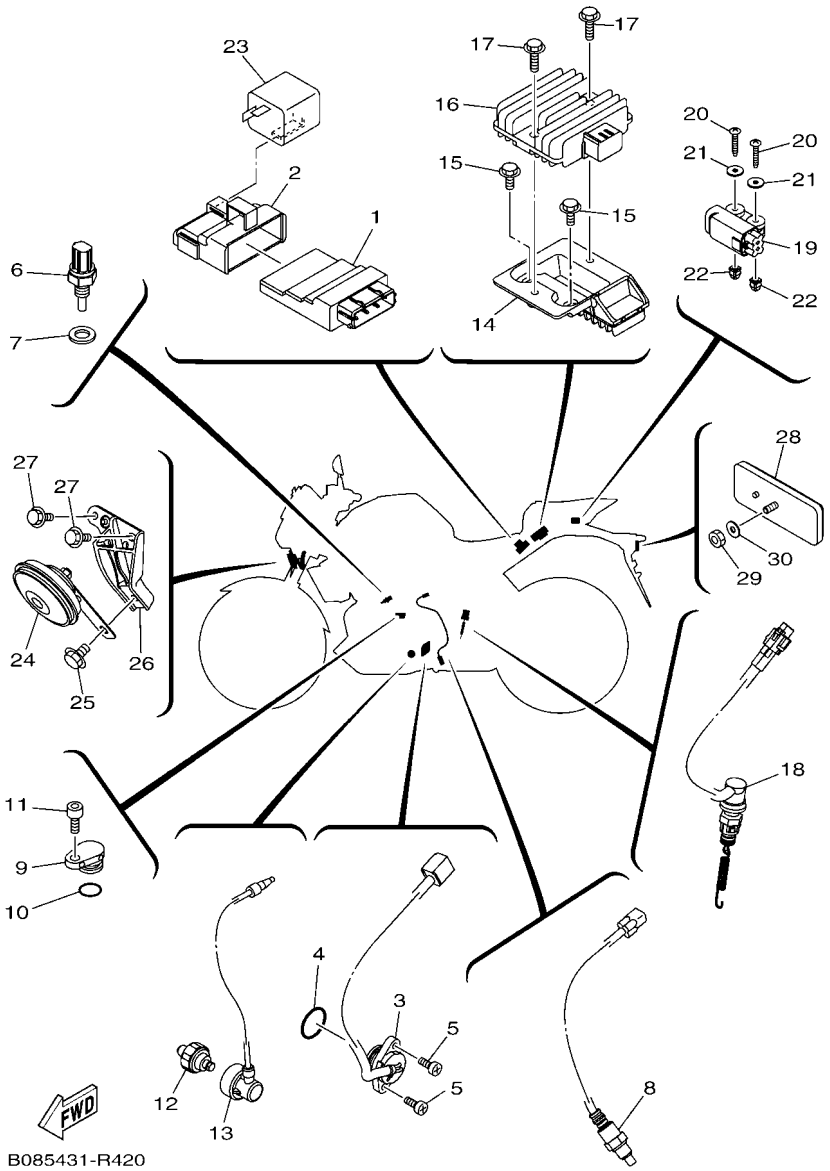


## FIG. 42 SISTEMA ELETRICO 2

| REF. NO. | No. PEÇA | DESCRIÇÃO | B091 | | | | | OBSERVAÇÕES |
|---|---|---|---|---|---|---|---|---|
| 1 | B03–H591A–00 | UNIDADE DE CONTROLE MOTORA CJ | 1 | | | | | |
| 2 | B01–H5546–00 | CINTA | 1 | | | | | |
| 3 | 1WD–H2540–00 | INTERRUPTOR NEUTRO CONJ. | 1 | | | | | |
| 4 | 93210–21801 | ANEL DE BORRACHA | 1 | | | | | |
| 5 | 98502–05016 | PARAFUSO | 2 | | | | | |
| 6 | 54P–H3591–00 | UNIDADE TERMOSTATICA | 1 | | | | | |
| 7 | 90430–10804 | GAXETA | 1 | | | | | |
| 8 | 1WD–H592A–00 | SENSOR DE O2 | 1 | | | | | |
| 9 | 2WD–E5189–00 | TAMPAO | 1 | | | | | |
| 10 | 93210–15566 | ANEL DE BORRACHA | 1 | | | | | |
| 11 | 91312–06016 | PARAFUSO HEXAGONAL | 1 | | | | | |
| 12 | 1WS–82504–00 | SENSOR DE PRESSAO DO OLEO | 1 | | | | | |
| 13 | 1WD–H1315–01 | CHICOTE DE FIOS CONJ. | 1 | | | | | |
| 14 | 1WD–H1961–00 | TAMPA | 1 | | | | | |
| 15 | 95802–06016 | PARAFUSO FLANGE | 2 | | | | | |
| 16 | 1WD–H1960–00 | RETIFICADOR & REGULADOR CONJ. | 1 | | | | | |
| 17 | 95802–06025 | PARAFUSO FLANGE | 2 | | | | | |
| 18 | 1WD–H2530–10 | INTERRUPTOR DE PARADA CONJ. | 1 | | | | | |
| 19 | 1WD–H2576–00 | SENSOR DO ANGULO DE INCLINACAO | 1 | | | | | |
| 20 | 90160–04009 | PARAFUSO | 2 | | | | | |
| 21 | 90201–04028 | ARRUELA PLANA | 2 | | | | | |
| 22 | 4B4–84334–00 | PORCA DE AJUSTE | 2 | | | | | |
| 23 | 2WD–H3351–00 | RELE DO PISCA | 1 | | | | | |
| 24 | 2PH–H3371–00 | BUZINA | 1 | | | | | |
| 25 | 95802–06012 | PARAFUSO FLANGE | 1 | | | | | |
| 26 | B01–H3378–00 | SUPORTE DA BUZINA | 1 | | | | | |
| 27 | 95807–06016 | PARAFUSO FLANGE | 2 | | | | | |

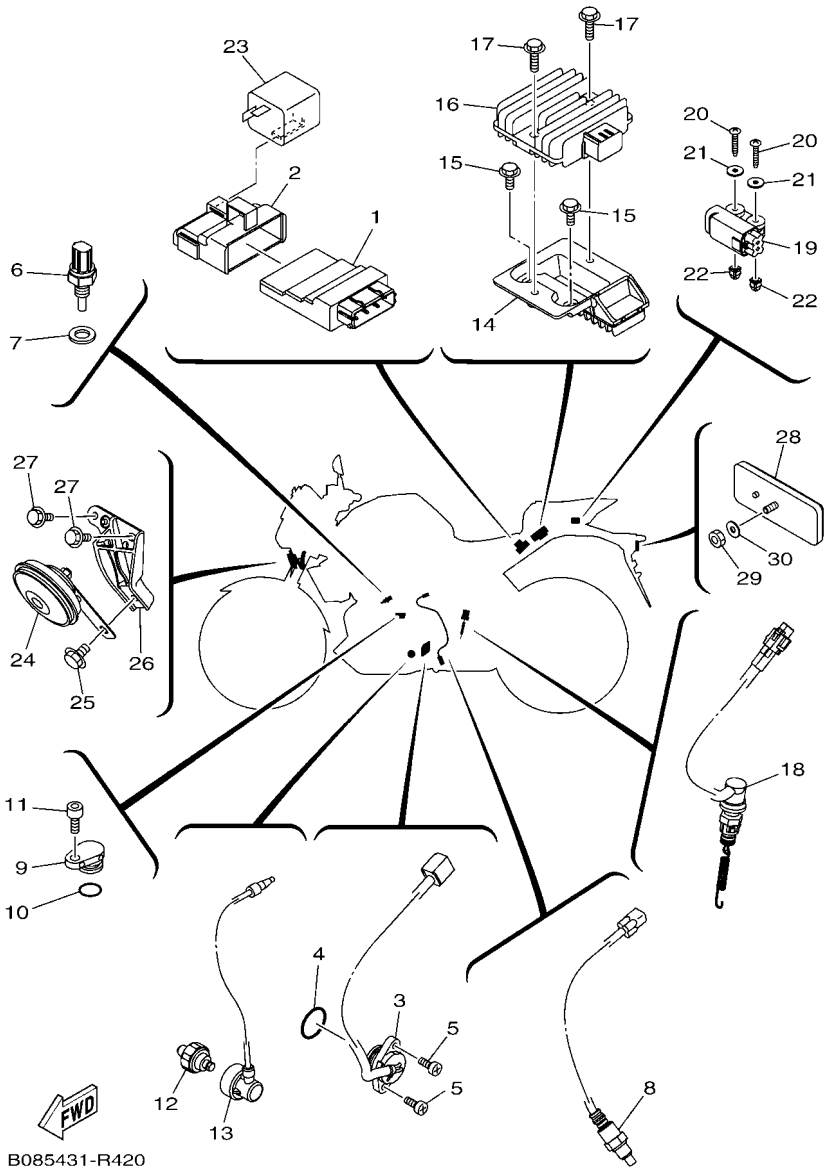


## FIG. 42 SISTEMA ELETRICO 2

| REF. NO. | No. PEÇA | DESCRIÇÃO | B091 | | | | | OBSERVAÇÕES |
|---|---|---|---|---|---|---|---|---|
| 28 | 1BW–H5130–00 | REFLETOR TRASEIRO CONJ. | 1 | | | | | |
| 29 | 95602–05100 | PORCA AUTO-TRAVANTE | 1 | | | | | |
| 30 | 90201–05043 | ARRUELA PLANA | 1 | | | | | |

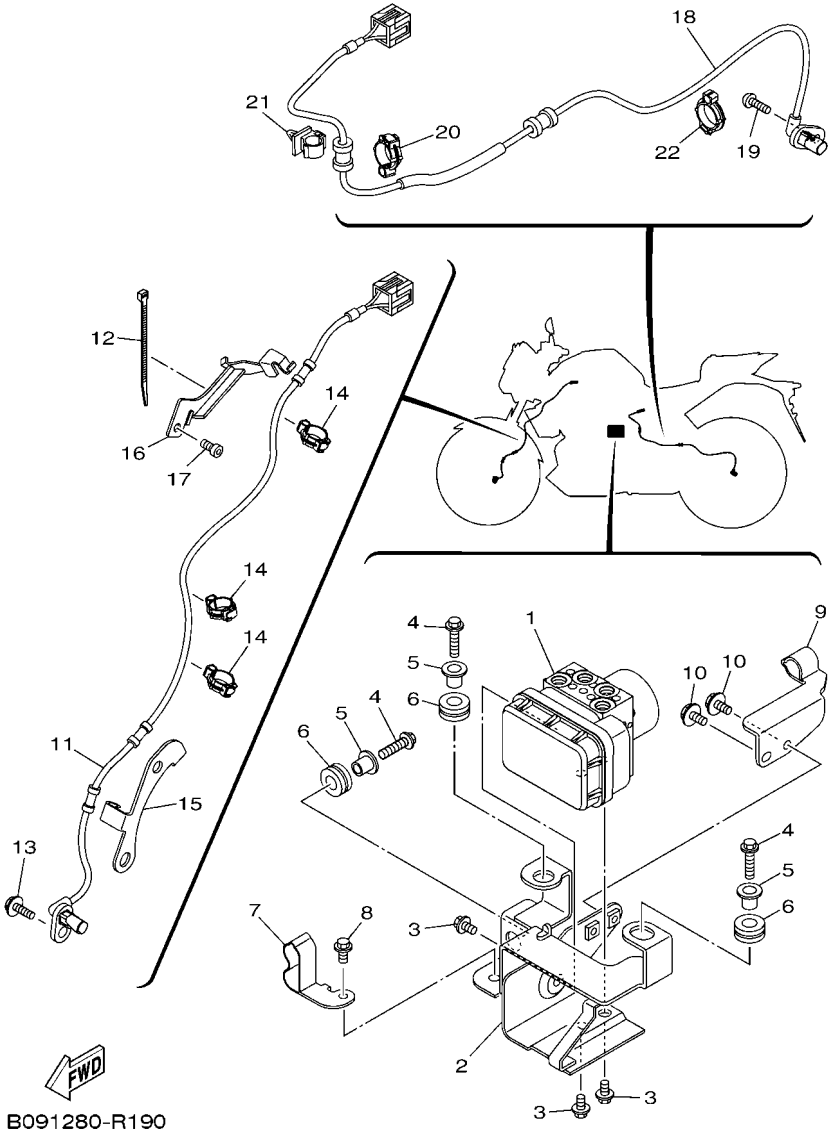


## FIG. 43 SISTEMA ELETRICO 3

| REF. NO. | No. PEÇA | DESCRIÇÃO | B091 | | | | | OBSERVAÇÕES |
|---|---|---|---|---|---|---|---|---|
| 1 | 2WD–85930–09 | UNIDADE HIDRAULICA CONJ. | 1 | | | | | |
| 2 | 2WD–F175T–00 | SUPORTE 1 | 1 | | | | | |
| 3 | 95022–06010 | PARAFUSO FLANGE | 3 | | | | | |
| 4 | 95022–06025 | PARAFUSO FLANGE | 3 | | | | | |
| 5 | 90387–06M60 | ESPACADOR | 3 | | | | | |
| 6 | 90480–14229 | ILHO DE BORRACHA | 3 | | | | | |
| 7 | 2WD–F5886–00 | SUPORTE DA MANGUEIRA DE FREIO | 1 | | | | | |
| 8 | 95027–06012 | PARAFUSO FLANGE | 1 | | | | | |
| 9 | 2WD–F5875–00 | SUPORTE MANGUEIRA DE FREIO 1 | 1 | | | | | |
| 10 | 95027–06012 | PARAFUSO FLANGE | 2 | | | | | |
| 11 | 2WD–85970–00 | SENSOR DA RODA DIANT. CONJ. | 1 | | | | | |
| 12 | 90464–22800 | BRACADEIRA | 1 | | | | | |
| 13 | 95027–06016 | PARAFUSO FLANGE | 1 | | | | | |
| 14 | 90464–12013 | BRACADEIRA | 3 | | | | | |
| 15 | 2WD–F3318–00 | FIXADOR DO CABO 1 | 1 | | | | | |
| 16 | 2WD–F3319–00 | FIXADOR DO CABO 2 | 1 | | | | | |
| 17 | 91317–06012 | PARAFUSO | 1 | | | | | |
| 18 | 2WD–85980–00 | SENSOR DA RODA TRAS. CONJ. | 1 | | | | | |
| 19 | 92012–06016 | PARAFUSO | 1 | | | | | |
| 20 | 90464–14803 | BRACADEIRA | 1 | | | | | |
| 21 | 90464–10800 | BRACADEIRA | 1 | | | | | |
| 22 | 90464–14803 | BRACADEIRA | 1 | | | | | |

| No. PEÇA | REF. NO. |
|---|---|
| 2MS–11361–00 | 1 – 9 |
| 1WD–11411–00 | 2 – 1 |
| 1WD–11413–00 | 2 – 23 |
| 1WD–11413–10 | 2 – 23 |
| 1WD–11413–20 | 2 – 23 |
| 1WD–11413–30 | 2 – 23 |
| 1WD–11413–40 | 2 – 23 |
| 1WD–11416–00 | 2 – 10 |
| 1WD–11416–10 | 2 – 10 |
| 1WD–11416–20 | 2 – 10 |
| 1WD–11416–30 | 2 – 10 |
| 1WD–11416–40 | 2 – 10 |
| 1WD–11650–00 | 2 – 2 |
| 5SL–11654–00 | 2 – 3 |
| 1WD–11656–00 | 2 – 5 |
| 1WD–11656–10 | 2 – 5 |
| 1WD–11656–20 | 2 – 5 |
| 1WD–11656–30 | 2 – 5 |
| 2MS–12153–10 | 3 – 9 |
| 1HX–12168–F0 | 3 – 8 |
| 1HX–12168–H1 | 3 – 8 |
| 1HX–12168–K1 | 3 – 8 |
| 1HX–12168–M1 | 3 – 8 |
| 1HX–12168–R1 | 3 – 8 |
| 1HX–12168–U1 | 3 – 8 |
| 1HX–12168–W1 | 3 – 8 |
| 1HX–12168–Y1 | 3 – 8 |
| 1HX–12169–11 | 3 – 8 |
| 1HX–12169–31 | 3 – 8 |
| 1HX–12169–50 | 3 – 8 |
| 1HX–12169–70 | 3 – 8 |
| 1HX–12169–90 | 3 – 8 |
| 1HX–12169–E0 | 3 – 8 |
| 1HX–12169–G0 | 3 – 8 |
| 1HX–12169–J0 | 3 – 8 |
| 1HX–12169–L0 | 3 – 8 |
| 1HX–12169–N0 | 3 – 8 |
| 1HX–12169–T0 | 3 – 8 |
| 2MS–12210–00 | 4 – 6 |
| 5P0–12411–00 | 6 – 1 |
| 5NL–12564–00 | 1 – 28 |
| 5SL–12671–00 | 6 – 9 |
| 2S3–12675–00 | 6 – 10 |
| 8GL–13571–00 | 8 – 13 |
| 5JW–14104–00 | 8 – 15 |
| 8A7–14139–00 | 8 – 17 |
| 5PS–14147–00 | 8 – 8 |
| 895–14169–00 | 8 – 16 |

| No. PEÇA | REF. NO. |
|---|---|
| 1WS–14335–00 | 8 – 10 |
| 8HG–14534–00 | 8 – 14 |
| 5VY–1482K–00 | 1 – 20 |
| 2H7–15361–00 | 5 – 18 |
| 1WD–16382–00 | 13 – 19 |
| 1WD–17424–00 | 14 – 28 |
| 278–17425–00 | 14 – 12 |
| | 14 – 29 |
| 1WS–2331G–00 | 22 – 18 |
| | 22 – 36 |
| 3FV–23462–00 | 22 – 39 |
| 34B–24785–00 | 31 – 35 |
| 5MT–25398–00 | 26 – 7 |
| | 28 – 18 |
| 5MT–25398–10 | 26 – 7 |
| | 28 – 18 |
| 5MT–25398–20 | 26 – 7 |
| | 28 – 18 |
| 1WD–25802–00 | 27 – 4 |
| 1WD–25802–50 | 29 – 4 |
| 1WD–25803–00 | 27 – 5 |
| 1WD–25803–50 | 29 – 5 |
| 1WD–25805–00 | 27 – 12 |
| 1WD–25806–00 | 29 – 15 |
| 5RB–25854–00 | 31 – 3 |
| 36Y–2589H–00 | 31 – 5 |
| 5KN–25926–01 | 29 – 17 |
| 34X–25937–00 | 29 – 7 |
| 23P–26133–00 | 30 – 13 |
| | 30 – 15 |
| 4SS–27218–00 | 33 – 3 |
| 3KW–27234–00 | 33 – 8 |
| 4BP–27261–00 | 32 – 25 |
| 5GM–28379–01 | 38 – 14 |
| 3WP–81980–00 | 41 – 14 |
| 4WA–81980–00 | 41 – 12 |
| 1WS–82504–00 | 42 – 12 |
| 5YU–82591–00 | 41 – 39 |
| 1KB–83311–00 | 36 – 2 |
| | 36 – 6 |
| | 36 – 11 |
| | 36 – 15 |
| 1KB–8333A–00 | 36 – 4 |
| | 36 – 17 |
| 1KB–8334A–00 | 36 – 8 |
| | 36 – 13 |
| 31A–83913–00 | 40 – 12 |
| 31A–83945–00 | 40 – 11 |

| No. PEÇA | REF. NO. |
|---|---|
| B04–84192–00 | 38 – 4 |
| 1RC–84314–00 | 38 – 3 |
| 1RC–84314–00 | 42 – 22 |
| 1RC–84397–00 | 38 – 2 |
| 1WS–85801–00 | 8 – 9 |
| 2WD–85930–09 | 43 – 1 |
| 2WD–85970–00 | 43 – 11 |
| 2WD–85980–00 | 43 – 18 |
| B01–E1102–00 | 1 – 1 |
| 1WD–E111G–00 | 1 – 16 |
| | 1 – 25 |
| 1WD–E1133–10 | 1 – 3 |
| 2MS–E1133–10 | 1 – 2 |
| 2MS–E1181–00 | 1 – 13 |
| 1WD–E1191–00 | 1 – 17 |
| 1WD–E1193–00 | 1 – 19 |
| 4YS–E1198–00 | 7 – 15 |
| 2MS–E1311–00 | 1 – 26 |
| 1WD–E1351–00 | 1 – 27 |
| 1WD–E1454–00 | 2 – 22 |
| 1WD–E1496–00 | 2 – 18 |
| 1WD–E1531–00 | 2 – 15 |
| 1WD–E1536–00 | 2 – 6 |
| 1WD–E1549–00 | 2 – 7 |
| 2MS–E1603–00 | 2 – 12 |
| 2MS–E1631–00 | 2 – 11 |
| 1WD–E1633–00 | 2 – 13 |
| 2MS–E2111–00 | 3 – 1 |
| 2MS–E2113–00 | 3 – 4 |
| 2MS–E2117–00 | 3 – 5 |
| 3S0–E2118–00 | 3 – 6 |
| 1PA–E2119–00 | 3 – 7 |
| 2MS–E2121–00 | 3 – 2 |
| 2MS–E2126–00 | 3 – 3 |
| B01–E2170–01 | 4 – 1 |
| 1WD–E2176–00 | 4 – 3 |
| B01–E2180–01 | 4 – 2 |
| 1WD–E2213–00 | 4 – 9 |
| 33S–E2223–00 | 5 – 8 |
| 1WD–E2241–00 | 1 – 18 |
| 1WD–E2251–00 | 4 – 11 |
| 2MS–E2252–00 | 4 – 12 |
| 1WD–E2256–00 | 4 – 14 |
| 2MS–E2405–00 | 6 – 8 |
| 1WD–E2413–00 | 6 – 2 |
| 1WD–E2420–00 | 5 – 1 |
| 1WD–E2422–00 | 5 – 14 |
| 1WD–E2428–00 | 5 – 15 |

| No. PEÇA | REF. NO. |
|---|---|
| 1WD–E2450–00 | 5 – 6 |
| 1WD–E2453–00 | 5 – 7 |
| 33S–E2456–00 | 5 – 9 |
| B04–E2461–00 | 6 – 11 |
| B04–E2462–10 | 6 – 12 |
| 2MS–E2577–00 | 6 – 4 |
| 1WD–E2578–00 | 6 – 5 |
| B04–E2614–00 | 38 – 6 |
| 1WD–E2681–00 | 5 – 12 |
| 1WD–E319L–00 | 5 – 10 |
| 1WD–E3300–00 | 7 – 1 |
| 1WD–E3341–00 | 7 – 3 |
| 1WD–E3342–00 | 7 – 4 |
| 1WD–E3410–00 | 7 – 9 |
| 1WD–E3414–00 | 7 – 16 |
| 1WD–E3415–00 | 7 – 10 |
| 1WD–E3417–00 | 7 – 13 |
| 1WD–E3440–00 | 7 – 11 |
| 54P–E3474–00 | 8 – 39 |
| 1WD–E3543–01 | 8 – 41 |
| 1WD–E3556–00 | 8 – 6 |
| 1WD–E3573–00 | 8 – 12 |
| 2MS–E3586–00 | 8 – 1 |
| 2MS–E3750–00 | 8 – 5 |
| 1WD–E3761–00 | 8 – 7 |
| 1WD–E3907–10 | 23 – 22 |
| 1WD–E3938–00 | 8 – 20 |
| 1WD–E3971–00 | 23 – 27 |
| 54P–E416A–00 | 8 – 18 |
| 1WD–E4243–00 | 8 – 19 |
| 1WD–E4411–00 | 8 – 25 |
| 2MS–E4412–00 | 8 – 29 |
| 1WD–E4422–00 | 8 – 33 |
| 1WD–E4437–00 | 8 – 28 |
| 52B–E443E–00 | 8 – 37 |
| 40D–E443G–00 | 28 – 30 |
| 1WD–E4451–00 | 8 – 36 |
| 1WD–E4452–00 | 8 – 30 |
| 1WD–E4457–00 | 8 – 31 |
| 1WD–E4462–00 | 8 – 34 |
| 2MS–E4465–00 | 8 – 21 |
| 2MS–E4466–00 | 8 – 22 |
| 2MS–E4469–00 | 8 – 26 |
| 2MS–E446C–00 | 8 – 27 |
| B04–E449E–00 | 24 – 51 |
| B02–E4602–00 | 9 – 1 |
| 1WD–E4613–00 | 9 – 21 |
| 1WD–E4628–00 | 9 – 27 |

| No. PEÇA | REF. NO. |
|---|---|
| B01–E4703–00 | 9 – 6 |
| 54D–E4714–00 | 9 – 15 |
| 1WD–E4715–00 | 9 – 16 |
| 1WD–E4728–00 | 9 – 10 |
| 1WD–E473L–00 | 9 – 2 |
| 5TP–E4747–00 | 9 – 4 |
| | 17 – 27 |
| | 32 – 48 |
| 1WD–E4758–00 | 9 – 7 |
| 1WD–E4763–00 | 9 – 14 |
| 1WD–E4775–00 | 9 – 5 |
| 1WD–E4840–00 | 1 – 31 |
| 1WD–E4881–00 | 1 – 32 |
| 1WD–E4882–01 | 1 – 34 |
| 1WD–E4890–00 | 1 – 21 |
| 1WD–E4899–00 | 1 – 22 |
| 1WD–E5148–00 | 10 – 4 |
| 1WD–E5150–20 | 10 – 1 |
| 1WD–E5155–00 | 10 – 12 |
| 2WD–E5189–00 | 42 – 9 |
| 1WD–E5362–00 | 5 – 19 |
| 2MS–E5373–01 | 8 – 44 |
| 1WD–E5377–00 | 11 – 21 |
| 1WD–E5411–00 | 11 – 1 |
| 1WD–E5413–10 | 11 – 16 |
| 1WD–E5418–00 | 11 – 22 |
| 1WD–E5421–00 | 5 – 2 |
| 2MS–E5441–00 | 11 – 14 |
| 1WD–E5451–00 | 11 – 7 |
| 1WD–E5461–00 | 11 – 10 |
| 1WD–E5462–00 | 11 – 17 |
| 1WD–E5514–00 | 12 – 1 |
| 1WD–E5515–00 | 12 – 3 |
| 44D–E5521–00 | 12 – 2 |
| 1WD–E5580–00 | 12 – 4 |
| 1WD–E6111–00 | 13 – 1 |
| 2MS–E6150–00 | 13 – 2 |
| 1WD–E6154–00 | 13 – 3 |
| 1WD–E6181–00 | 13 – 13 |
| 1WD–E6324–00 | 13 – 6 |
| 1WD–E6331–00 | 13 – 5 |
| 2MS–E6333–10 | 13 – 8 |
| 1WD–E6337–00 | 13 – 9 |
| 2MS–E6340–00 | 13 – 15 |
| 2MS–E6350–00 | 13 – 7 |
| 1WD–E6356–00 | 13 – 14 |
| 2MS–E6371–00 | 13 – 4 |
| 2MS–E7121–00 | 14 – 7 |

| No. PEÇA | REF. NO. |
|---|---|
| 2MS–E7131–00 | 14 – 5 |
| 2MS–E7151–00 | 14 – 2 |
| 2MS–E7161–00 | 14 – 6 |
| 2MS–E7211–00 | 14 – 23 |
| 2MS–E7221–00 | 14 – 14 |
| 2MS–E7231–00 | 14 – 18 |
| 2MS–E7241–00 | 14 – 19 |
| 2MS–E7251–00 | 14 – 22 |
| 2MS–E7261–00 | 14 – 17 |
| 1WD–E7402–00 | 14 – 13 |
| 2MS–E7411–00 | 14 – 1 |
| 1WD–E7460–00 | 14 – 31 |
| 1WD–E8101–00 | 16 – 4 |
| B01–E8111–00 | 16 – 11 |
| 1WD–E8112–00 | 16 – 16 |
| 44C–E8113–00 | 16 – 12 |
| 1WD–E8115–00 | 16 – 13 |
| 1WD–E8127–00 | 16 – 2 |
| 1WD–E8140–00 | 16 – 8 |
| 1WD–E8175–00 | 16 – 3 |
| 1WD–E8337–00 | 16 – 1 |
| 1WD–E8511–00 | 15 – 4 |
| 1WD–E8512–00 | 15 – 5 |
| 1WD–E8513–00 | 15 – 6 |
| 1WD–E8531–00 | 15 – 7 |
| 1WD–E8536–00 | 15 – 9 |
| 1WD–E8540–10 | 15 – 1 |
| 5TP–E8542–00 | 15 – 2 |
| 1WD–E8562–00 | 15 – 10 |
| B04–F1110–00–P0 | 17 – 1 |
| B04–F1110–00–P1 | 17 – 1 |
| B01–F111F–00 | 20 – 18 |
| 4VW–F111M–04 | 17 – 29 |
| 2MS–F115R–00 | 23 – 45 |
| 1WD–F1171–00 | 17 – 15 |
| 1WD–F117K–00 | 25 – 12 |
| 22D–F118K–00 | 24 – 3 |
| 1WD–F122A–00 | 17 – 21 |
| B04–F122B–00 | 17 – 22 |
| 2MS–F134X–00 | 23 – 46 |
| 1WD–F135F–00 | 17 – 12 |
| B05–F137N–00 | 24 – 30 |
| B05–F137N–10 | 24 – 30 |
| B05–F137N–20 | 24 – 30 |
| B05–F137P–00 | 24 – 41 |
| B05–F137P–10 | 24 – 41 |
| B05–F137P–20 | 24 – 41 |
| B04–F137U–00–P0 | 6 – 18 |

| No. PEÇA | REF. NO. |
|---|---|
| B04–F137U–00–P1 | 6 – 18 |
| B04–F137V–00–P0 | 6 – 19 |
| B04–F137V–00–P1 | 6 – 19 |
| B04–F137W–00–P0 | 24 – 29 |
| B04–F137X–00–P0 | 24 – 40 |
| B01–F144G–00 | 32 – 28 |
| 1WD–F1511–00–P0 | 18 – 1 |
| 1WD–F1511–00–P4 | 18 – 1 |
| 1WD–F1511–00–P5 | 18 – 1 |
| B04–F1533–00 | 24 – 55 |
| 5BP–F153E–10 | 19 – 2 |
| | 19 – 12 |
| B04–F1557–00 | 6 – 20 |
| B04–F1569–00 | 18 – 2 |
| B04–F1569–10 | 18 – 2 |
| B04–F1569–20 | 18 – 2 |
| 1WD–F1586–00 | 18 – 10 |
| 1WD–F1611–01 | 18 – 11 |
| 1WD–F1617–00 | 18 – 19 |
| 1WD–F1621–00 | 18 – 29 |
| 1WD–F1629–01 | 18 – 18 |
| 1WD–F163A–00 | 18 – 31 |
| 1WD–F163E–00 | 18 – 16 |
| B04–F1642–00 | 24 – 54 |
| 1WD–F1652–00 | 17 – 2 |
| B01–F1668–00 | 20 – 17 |
| 1WD–F1669–00 | 18 – 12 |
| 1WD–F1688–00 | 18 – 24 |
| 1WD–F1689–00 | 18 – 25 |
| 1WD–F16A2–00 | 18 – 15 |
| B04–F1711–00–P0 | 19 – 1 |
| B04–F1711–00–P1 | 19 – 1 |
| B04–F1711–00–P2 | 19 – 1 |
| B04–F1716–00 | 19 – 50 |
| B04–F171E–00–P0 | 19 – 42 |
| B04–F171E–00–P1 | 19 – 42 |
| 1WD–F171L–00 | 19 – 21 |
| 1WD–F171M–00 | 19 – 24 |
| 1WD–F171N–00 | 19 – 27 |
| B04–F171X–00–P0 | 19 – 46 |
| B04–F171X–00–P1 | 19 – 46 |
| B04–F1721–00–P0 | 19 – 11 |
| B04–F1721–00–P1 | 19 – 11 |
| B04–F1721–00–P2 | 19 – 11 |
| B04–F1726–00 | 19 – 52 |
| 1WD–F172W–00 | 19 – 36 |
| 1WD–F1731–00–P0 | 19 – 40 |
| 1WD–F1731–00–P4 | 19 – 40 |

| No. PEÇA | REF. NO. |
|---|---|
| 1WD–F1732–00 | 39 – 7 |
| 2WD–F175T–00 | 43 – 2 |
| B04–F175T–00 | 6 – 21 |
| B04–F175U–00 | 6 – 22 |
| B04–F1781–00 | 19 – 2 |
| | 19 – 12 |
| B04–F1781–20 | 19 – 2 |
| | 19 – 12 |
| 5HH–F178A–00 | 17 – 30 |
| 1WD–F179E–00 | 41 – 35 |
| 1WD–F1816–00 | 19 – 33 |
| 1WD–F1817–00 | 19 – 34 |
| 3C1–F1828–00 | 19 – 32 |
| 1WD–F1871–00 | 19 – 29 |
| 1WD–F1875–00 | 19 – 31 |
| 1WD–F191B–00 | 17 – 6 |
| 1WD–F193A–00 | 17 – 3 |
| 1WD–F2110–00 | 20 – 1 |
| 1WD–F2129–00 | 20 – 3 |
| B01–F2141–00 | 20 – 2 |
| B01–F2151–00 | 20 – 7 |
| 1WD–F2174–00 | 28 – 27 |
| 1WD–F2184–00 | 20 – 4 |
| 1WD–F2210–00 | 20 – 14 |
| 1WD–F2311–00 | 20 – 11 |
| 1WD–F248B–00 | 20 – 9 |
| B01–F3102–00 | 22 – 1 |
| B03–F3103–00 | 22 – 19 |
| 1WD–F3110–00 | 22 – 3 |
| | 22 – 21 |
| 45P–F3111–00 | 22 – 16 |
| | 22 – 34 |
| 1WD–F3118–00 | 22 – 15 |
| | 22 – 33 |
| 45P–F3125–00 | 22 – 5 |
| | 22 – 23 |
| 1WD–F3126–00 | 22 – 2 |
| 2WD–F3136–00 | 22 – 20 |
| 1WD–F3141–00 | 22 – 13 |
| | 22 – 31 |
| 45P–F3144–00 | 22 – 9 |
| | 22 – 27 |
| 45P–F3145–00 | 22 – 7 |
| | 22 – 25 |
| 45P–F3146–00 | 22 – 6 |
| | 22 – 24 |
| 45P–F3149–00 | 22 – 14 |
| | 22 – 32 |

| No. PEÇA | REF. NO. |
|---|---|
| 45P–F3156–00 | 22 – 8 |
| | 22 – 26 |
| 45P–F3156–00 | 22 – 11 |
| | 22 – 29 |
| 1WD–F3170–00 | 22 – 4 |
| | 22 – 22 |
| 1WD–F3173–00 | 22 – 10 |
| | 22 – 28 |
| 31B–F3181–00 | 22 – 12 |
| | 22 – 30 |
| 45P–F3188–00 | 22 – 17 |
| | 22 – 35 |
| 2WD–F3318–00 | 43 – 15 |
| 2WD–F3319–00 | 43 – 16 |
| B01–F3340–00 | 22 – 37 |
| 45P–F3346–00 | 22 – 40 |
| B08–F334G–00 | 38 – 30 |
| 5BP–F3416–10 | 21 – 2 |
| 5BP–F3418–00 | 21 – 5 |
| B04–F3435–00 | 21 – 6 |
| B04–F3441–00–P2 | 21 – 10 |
| B04–F3442–00 | 21 – 13 |
| 1WD–F4110–00 | 23 – 1 |
| B04–F4121–00–P0 | 24 – 12 |
| B04–F4121–00–P1 | 24 – 12 |
| B04–F4122–00–P0 | 24 – 23 |
| B04–F4122–00–P1 | 24 – 23 |
| B04–F4129–00–P0 | 24 – 9 |
| B04–F4129–00–P1 | 24 – 9 |
| B04–F4129–00–P2 | 24 – 9 |
| 1WD–F412Y–00 | 23 – 6 |
| B04–F4139–00–P0 | 24 – 20 |
| B04–F4139–00–P1 | 24 – 20 |
| B04–F4139–00–P2 | 24 – 20 |
| 1WD–F413B–00 | 24 – 10 |
| | 24 – 21 |
| B04–F414E–00 | 24 – 8 |
| 5D9–F414G–00 | 17 – 4 |
| | 23 – 4 |
| B04–F414G–00 | 17 – 14 |
| 45P–F414H–00 | 23 – 5 |
| 2MS–F4170–00 | 23 – 43 |
| 1DW–F4180–02 | 23 – 35 |
| 1WD–F4188–00 | 23 – 2 |
| 1WD–F4191–00 | 23 – 12 |
| 2MS–F419F–00 | 23 – 38 |
| B04–F41A3–00 | 24 – 18 |
| B04–F41A4–00 | 24 – 19 |

| No. PEÇA | REF. NO. |
|---|---|
| B04–F41B1–00–P0 | 24 – 1 |
| B04–F4244–00 | 24 – 56 |
| B04–F4244–10 | 24 – 56 |
| B04–F4244–20 | 24 – 56 |
| B04–F4245–00 | 24 – 57 |
| B04–F4245–10 | 24 – 57 |
| B04–F4245–20 | 24 – 57 |
| B04–F4254–00 | 24 – 2 |
| 1WD–F4312–00 | 23 – 28 |
| 1WD–F4314–00 | 23 – 29 |
| 2MS–F4314–01 | 23 – 33 |
| 2MS–F4315–00 | 23 – 41 |
| 2MS–F4316–00 | 23 – 49 |
| 1WD–F4339–00 | 23 – 7 |
| 1WD–F4376–00 | 23 – 31 |
| 3C1–F4486–00 | 23 – 25 |
| 1WD–F4491–00 | 23 – 24 |
| B04–F4710–00 | 25 – 1 |
| 1WD–F4711–00 | 25 – 2 |
| 3C1–F4741–00 | 25 – 6 |
| 5BP–F4741–00 | 25 – 3 |
| B04–F474A–00–P0 | 25 – 15 |
| B04–F474A–00–P1 | 25 – 15 |
| B04–F474H–00 | 25 – 20 |
| B04–F474J–00 | 25 – 22 |
| B04–F474W–00–P0 | 25 – 17 |
| B04–F474W–00–P1 | 25 – 17 |
| 1WD–F4750–00 | 25 – 5 |
| 1WD–F4780–00 | 25 – 7 |
| 1WD–F478E–00 | 25 – 10 |
| 1WD–F4792–00 | 25 – 8 |
| 2MS–F483H–00 | 23 – 44 |
| B04–F4845–00 | 25 – 16 |
| B04–F4846–00 | 25 – 18 |
| B01–F510C–00 | 26 – 2 |
| 2WD–F5168–01–98 | 26 – 1 |
| 2WD–F5168–01–P0 | 26 – 1 |
| 2DP–F517G–00 | 26 – 8 |
| | 28 – 19 |
| B01–F5181–00 | 26 – 11 |
| 2WD–F5338–01–98 | 28 – 1 |
| 2WD–F5338–01–P0 | 28 – 1 |
| 1WD–F5364–00 | 28 – 5 |
| B01–F5366–00–35 | 28 – 6 |
| 1WD–F5377–00 | 28 – 9 |
| 1WD–F537W–00 | 28 – 11 |
| 1WD–F537X–00 | 28 – 12 |
| B01–F5381–00 | 28 – 21 |

| No. PEÇA | REF. NO. |
|---|---|
| B01–F5383–00 | 28 – 23 |
| 1PA–F5386–00 | 26 – 10 |
| 1WD–F5386–00 | 28 – 22 |
| B01–F5388–00 | 28 – 26 |
| 1WD–F539F–00 | 28 – 13 |
| B01–F5444–00 | 28 – 10 |
| 1WD–F5807–00 | 31 – 2 |
| 1WD–F5808–00 | 33 – 2 |
| 1WD–F580E–00 | 33 – 1 |
| 1WD–F580U–01 | 27 – 3 |
| 2WD–F580W–00 | 29 – 3 |
| B08–F581J–00 | 31 – 21 |
| 2WD–F581K–00 | 33 – 22 |
| 1WD–F581U–00 | 27 – 1 |
| 50C–F582A–50 | 33 – 5 |
| B04–F582E–00 | 33 – 21 |
| 2WD–F582J–00 | 33 – 25 |
| 1WD–F582W–00 | 29 – 1 |
| 5TL–F5838–00 | 29 – 18 |
| 1WD–F5852–00 | 31 – 4 |
| 1WD–F5852–50 | 33 – 12 |
| 2VN–F5854–00 | 33 – 10 |
| 3C1–F5855–00 | 31 – 7 |
| 50C–F5855–00 | 33 – 11 |
| 50C–F5866–00 | 33 – 6 |
| 3RW–F5867–00 | 31 – 6 |
| 1WD–F5870–00 | 31 – 1 |
| B08–F5872–00 | 31 – 17 |
| 2WD–F5873–00 | 31 – 25 |
| 2WD–F5874–00 | 31 – 28 |
| 2WD–F5875–00 | 43 – 9 |
| 2WD–F5876–00 | 31 – 22 |
| 2WD–F5886–00 | 43 – 7 |
| 2WD–F5887–00 | 33 – 28 |
| 2WD–F588F–00 | 31 – 15 |
| 2WD–F588G–00 | 31 – 31 |
| 50C–F5894–10 | 33 – 9 |
| 1WD–F5895–50 | 33 – 13 |
| 50C–F589A–00 | 33 – 15 |
| 1WD–F5914–50 | 29 – 16 |
| 5YP–F5917–00 | 27 – 8 |
| | 29 – 6 |
| 1WD–F5919–00 | 27 – 10 |
| 1WD–F5919–50 | 29 – 9 |
| 2WD–F5921–50 | 29 – 12 |
| 5YP–F5924–00 | 27 – 11 |
| 1WD–F5924–50 | 29 – 10 |
| 5YP–F5925–01 | 27 – 9 |

| No. PEÇA | REF. NO. |
|---|---|
| 5YP–F5925–01 | 29 – 11 |
| 5YP–F5937–00 | 27 – 7 |
| 1WD–F5939–51 | 29 – 13 |
| 1WD–F5939–61 | 29 – 14 |
| B04–F6111–00 | 30 – 1 |
| B01–F6240–00 | 30 – 3 |
| B01–F6241–00 | 30 – 2 |
| B01–F6246–00 | 30 – 4 |
| B50–F6280–00 | 30 – 12 |
| B50–F6290–00 | 30 – 14 |
| B04–F6301–00 | 30 – 7 |
| B04–F6315–00 | 30 – 10 |
| B04–F6335–00 | 30 – 6 |
| B01–F7211–00 | 32 – 24 |
| 50C–F7222–00 | 33 – 4 |
| 45P–F7261–00 | 16 – 17 |
| 1WD–F7311–00 | 32 – 1 |
| B04–F7321–00 | 32 – 2 |
| 1WD–F741L–00 | 32 – 32 |
| 1WD–F742L–00 | 32 – 40 |
| 1WD–F7431–00 | 32 – 33 |
| 1WD–F7435–00 | 32 – 11 |
| | 32 – 20 |
| 1WD–F7437–00 | 32 – 36 |
| | 32 – 44 |
| 1WD–F7441–00 | 32 – 41 |
| B01–F7442–00 | 32 – 9 |
| B01–F7443–00 | 32 – 18 |
| 2MS–F7445–00 | 32 – 15 |
| 2MS–F7446–00 | 32 – 31 |
| B01–F7451–00 | 32 – 10 |
| B01–F7461–00 | 32 – 19 |
| 1WD–F8100–00 | 25 – 29 |
| B09–F8199–W0 | 25 – 31 |
| 31B–F8307–00 | 19 – 3 |
| | 19 – 13 |
| B04–F8307–00 | 19 – 10 |
| B04–F8307–10 | 19 – 20 |
| B04–F831V–00–P0 | 38 – 9 |
| B04–F831V–00–P1 | 38 – 9 |
| B04–F832V–00–P0 | 38 – 10 |
| B04–F832V–00–P1 | 38 – 10 |
| B04–F833E–00 | 19 – 66 |
| B04–F833F–00 | 19 – 55 |
| B04–F833G–00 | 19 – 56 |
| B04–F8345–00 | 38 – 21 |
| B04–F8356–00 | 38 – 28 |
| B04–F8357–00 | 38 – 19 |

| No. PEÇA | REF. NO. |
|---|---|
| B04–F8358–00 | 41 – 40 |
| 1PA–F836B–00 | 19 – 67 |
| B04–F836K–00 | 24 – 35 |
| B04–F836L–00 | 24 – 46 |
| B04–F837N–00 | 24 – 38 |
| B08–F8385–00–P0 | 19 – 54 |
| B08–F8385–00–P1 | 19 – 54 |
| B08–F8385–00–P2 | 19 – 54 |
| B08–F842M–00 | 19 – 64 |
| 1WD–H1315–01 | 42 – 13 |
| 1WD–H1410–01 | 34 – 2 |
| 1WD–H1450–00 | 34 – 1 |
| 1WD–H1800–00 | 35 – 1 |
| 1WD–H1801–00 | 35 – 2 |
| 1WD–H1828–00 | 35 – 4 |
| 4FP–H182L–00 | 35 – 6 |
| 1WD–H183G–00 | 35 – 5 |
| 1WD–H1861–00 | 35 – 3 |
| 1WD–H1940–00 | 41 – 17 |
| 1WD–H1950–00 | 41 – 16 |
| 1WD–H1960–00 | 42 – 16 |
| 1WD–H1961–00 | 42 – 14 |
| 4B4–H1980–00 | 41 – 13 |
| 44C–H2100–02 | 41 – 6 |
| 2WD–H2115–00 | 41 – 20 |
| 2WD–H2116–01 | 41 – 21 |
| 1WD–H2121–00 | 41 – 7 |
| 5TL–H2131–00 | 25 – 30 |
| B01–H2131–00 | 41 – 8 |
| 45P–H2133–00 | 40 – 5 |
| 1WD–H2151–00 | 41 – 18 |
| 1WD–H2151–10 | 41 – 11 |
| 1WD–H2151–20 | 41 – 10 |
| 1WD–H2151–30 | 41 – 15 |
| 1WD–H2310–00 | 41 – 1 |
| B04–H2314–00 | 41 – 2 |
| B04–H2314–10 | 41 – 3 |
| 1WD–H2370–00 | 41 – 5 |
| B04–H2501–00 | 41 – 30 |
| 1WD–H250A–00 | 41 – 31 |
| 1WD–H2530–10 | 42 – 18 |
| 1WD–H2540–00 | 42 – 3 |
| 1WD–H2566–00 | 41 – 33 |
| 1WD–H2576–00 | 42 – 19 |
| B08–H2590–00 | 41 – 9 |
| 1WD–H2591–00 | 41 – 36 |
| 1WD–H2911–00 | 40 – 9 |
| 5BP–H2917–00 | 40 – 15 |
| B04–H3310–10 | 36 – 1 |
| 1WD–H3318–00 | 36 – 18 |
| BD6–H3318–10 | 36 – 9 |
| B04–H3320–10 | 36 – 5 |
| 1WD–H3330–10 | 36 – 10 |
| 3D9–H3333–10 | 36 – 3 |
| | 36 – 7 |
| | 36 – 12 |
| | 36 – 16 |
| 1WD–H3340–10 | 36 – 14 |
| 2WD–H3351–00 | 42 – 23 |
| 2PH–H3371–00 | 42 – 24 |
| B01–H3378–00 | 42 – 26 |
| B02–H3500–00 | 37 – 1 |
| B04–H3519–00 | 37 – 5 |
| 1WD–H3571–00 | 37 – 2 |
| 1WD–H3572–00 | 37 – 3 |
| 54P–H3591–00 | 42 – 6 |
| 1WD–H3912–00 | 40 – 10 |
| 1WD–H3922–00 | 31 – 8 |
| 45P–H395W–00 | 40 – 2 |
| | 40 – 6 |
| 45P–H395X–00 | 40 – 3 |
| B04–H3972–00 | 40 – 1 |
| B04–H3975–00 | 40 – 4 |
| 2DP–H3980–00 | 31 – 11 |
| B04–H4144–00 | 38 – 8 |
| B04–H4196–00 | 38 – 32 |
| B04–H4310–00 | 38 – 1 |
| B04–H4369–00–P0 | 38 – 15 |
| B04–H4410–00 | 38 – 5 |
| 2SN–H4527–00 | 38 – 31 |
| 1WD–H4547–00 | 39 – 10 |
| 1WD–H4710–01 | 39 – 1 |
| 1WD–H4726–00 | 39 – 11 |
| 1WD–H4740–00 | 39 – 8 |
| 1WD–H4744–00 | 39 – 9 |
| 1WD–H4753–00 | 39 – 12 |
| 1BW–H5130–00 | 42 – 28 |
| B01–H5546–00 | 42 – 2 |
| 1WD–H5752–00 | 23 – 23 |
| B03–H591A–00 | 42 – 1 |
| 1WD–H592A–00 | 42 – 8 |
| 4C9–W0048–00 | 27 – 6 |
| 5YP–W0048–50 | 29 – 8 |
| 1WD–WF461–00 | 23 – 18 |
| 1WD–WF479–00 | 25 – 11 |
| B04–XH250–00 | 41 – 29 |
| 90105–06027 | 1 – 5 |
| 90105–07800 | 4 – 4 |
| 90105–07800 | 10 – 6 |
| 90105–088F8 | 2 – 16 |
| 90105–088G0 | 10 – 7 |
| 90105–088G7 | 9 – 23 |
| 90105–106A7 | 32 – 5 |
| 90105–10883 | 2 – 8 |
| | 34 – 4 |
| 90105–10889 | 17 – 9 |
| 90105–10891 | 17 – 10 |
| 90105–12093 | 20 – 15 |
| 90105–12309 | 20 – 8 |
| 90105–14102 | 21 – 8 |
| 90109–05003 | 18 – 30 |
| 90109–060G4 | 41 – 32 |
| 90109–063F1 | 18 – 13 |
| 90109–06577 | 31 – 10 |
| 90109–06898 | 1 – 15 |
| 90109–06899 | 1 – 24 |
| 90109–085G6 | 32 – 17 |
| | 32 – 30 |
| 90110–05806 | 23 – 19 |
| 90110–05810 | 41 – 34 |
| 90110–06161 | 4 – 13 |
| | 4 – 15 |
| | 12 – 5 |
| 90110–06182 | 15 – 11 |
| 90110–06870 | 1 – 11 |
| 90110–08071 | 32 – 39 |
| | 32 – 47 |
| 90110–08805 | 25 – 19 |
| 90111–05003 | 19 – 37 |
| | 19 – 43 |
| | 19 – 47 |
| 90111–05018 | 18 – 23 |
| 90111–05021 | 18 – 20 |
| 90111–06013 | 32 – 16 |
| 90111–06029 | 38 – 22 |
| 90111–06086 | 38 – 18 |
| 90111–06096 | 38 – 13 |
| 90111–06117 | 19 – 57 |
| | 24 – 5 |
| | 39 – 2 |
| 90111–06119 | 20 – 13 |
| 90111–06121 | 33 – 20 |
| 90111–06137 | 18 – 3 |
| 90111–06140 | 38 – 11 |
| 90111–06151 | 6 – 24 |
| 90111–06152 | 9 – 30 |
| 90111–06802 | 9 – 8 |
| 90111–06847 | 9 – 13 |
| 90111–08087 | 27 – 2 |
| | 29 – 2 |
| 90111–08826 | 25 – 24 |
| 90116–10065 | 28 – 14 |
| 90119–05020 | 24 – 14 |
| | 24 – 25 |
| 90119–06810 | 19 – 9 |
| | 19 – 19 |
| | 24 – 32 |
| | 24 – 43 |
| 90123–08083 | 40 – 17 |
| 90149–05029 | 26 – 9 |
| | 28 – 20 |
| 90149–10044 | 27 – 13 |
| 90151–03005 | 40 – 16 |
| 90159–06054 | 25 – 13 |
| 90160–04009 | 42 – 20 |
| 90160–05012 | 6 – 26 |
| 90160–05808 | 19 – 41 |
| 90170–06023 | 16 – 14 |
| 90170–18221 | 13 – 11 |
| 90179–04003 | 24 – 37 |
| | 24 – 48 |
| 90179–07652 | 2 – 4 |
| 90179–08316 | 40 – 18 |
| 90179–10805 | 17 – 11 |
| 90179–20013 | 14 – 33 |
| 90179–25615 | 21 – 3 |
| 90183–05076 | 18 – 14 |
| 90183–050A7 | 18 – 21 |
| | 19 – 4 |
| | 19 – 14 |
| | 24 – 34 |
| | 24 – 45 |
| 90183–05807 | 19 – 5 |
| | 19 – 15 |
| | 19 – 44 |
| | 19 – 48 |
| | 19 – 65 |
| | 24 – 11 |
| | 24 – 17 |
| | 24 – 22 |
| | 24 – 28 |
| | 39 – 5 |
| 90183–06011 | 9 – 20 |
| 90183–06069 | 38 – 7 |
| 90183–06815 | 24 – 36 |
| | 24 – 47 |
| 90183–06818 | 9 – 9 |
| | 17 – 19 |
| 90201–04028 | 42 – 21 |
| 90201–04804 | 39 – 14 |
| 90201–05036 | 38 – 25 |
| 90201–05043 | 42 – 30 |
| 90201–05827 | 37 – 8 |
| 90201–06072 | 6 – 15 |
| 90201–06088 | 9 – 19 |
| 90201–06380 | 19 – 38 |
| | 23 – 9 |
| | 23 – 15 |
| 90201–06557 | 18 – 7 |
| 90201–08083 | 33 – 17 |
| 90201–08119 | 25 – 26 |
| 90201–08612 | 9 – 24 |
| 90201–087F0 | 9 – 26 |
| 90201–10021 | 16 – 19 |
| | 32 – 26 |
| 90201–10118 | 31 – 19 |
| | 31 – 24 |
| | 31 – 27 |
| | 31 – 30 |
| | 33 – 24 |
| | 33 – 27 |
| 90201–10119 | 7 – 6 |
| 90201–102R1 | 2 – 9 |
| | 34 – 5 |
| 90201–10829 | 21 – 16 |
| 90201–10843 | 13 – 16 |
| 90201–10845 | 1 – 10 |
| 90201–127E1 | 16 – 7 |
| 90201–16812 | 2 – 19 |
| 90201–17809 | 28 – 25 |
| 90201–20023 | 14 – 32 |
| 90201–20276 | 14 – 25 |
| 90201–22013 | 13 – 12 |
| 90202–05180 | 19 – 45 |
| | 19 – 49 |
| 90202–26142 | 21 – 4 |
| 90206–14001 | 16 – 18 |
| 90209–25011 | 14 – 15 |
| 90214–22008 | 14 – 3 |
| | 14 – 20 |
| 90215–18800 | 13 – 10 |
| 90240–08124 | 33 – 16 |
| 90240–08145 | 32 – 13 |
| | 32 – 22 |
| | 32 – 37 |
| | 32 – 45 |
| 90269–05008 | 23 – 37 |
| 90269–06081 | 18 – 17 |
| | 18 – 32 |
| | 19 – 8 |
| | 19 – 18 |
| | 19 – 23 |
| | 19 – 26 |
| | 23 – 48 |
| 90269–06812 | 6 – 25 |
| 90269–07076 | 24 – 52 |
| 90269–09001 | 24 – 53 |
| 90280–05013 | 34 – 6 |
| 90282–04036 | 2 – 17 |
| 90338–06809 | 21 – 17 |
| 90338–06810 | 21 – 12 |
| | 25 – 25 |
| 90338–16262 | 10 – 2 |
| 90338–23801 | 17 – 13 |
| 90340–12808 | 7 – 14 |
| 90340–18002 | 1 – 4 |
| 90340–32819 | 11 – 5 |
| 90387–05042 | 39 – 16 |
| 90387–06130 | 6 – 23 |
| 90387–06242 | 20 – 12 |
| 90387–06299 | 23 – 8 |
| | 23 – 14 |
| 90387–064W3 | 6 – 16 |
| 90387–066J9 | 18 – 26 |
| 90387–067V1 | 39 – 3 |
| 90387–06857 | 19 – 30 |
| 90387–06899 | 19 – 6 |
| | 19 – 16 |
| | 19 – 58 |
| | 24 – 4 |
| | 24 – 13 |
| | 24 – 24 |
| | 24 – 31 |
| | 24 – 42 |
| | 38 – 17 |
| 90387–068C5 | 18 – 5 |
| 90387–068L0 | 18 – 9 |
| 90387–068L9 | 18 – 27 |

| No. PEÇA | REF. NO. |
|---|---|
| 90387–068L9 | 38 – 12 |
| 90387–068N4 | 9 – 18 |
| 90387–06M60 | 43 – 5 |
| 90387–07717 | 38 – 23 |
| 90387–07819 | 17 – 17 |
| 90387–087L0 | 9 – 12 |
| | 9 – 29 |
| 90387–08813 | 17 – 26 |
| | 32 – 49 |
| 90387–09801 | 19 – 60 |
| 90387–10010 | 32 – 6 |
| 90387–10842 | 25 – 27 |
| 90387–17810 | 28 – 2 |
| 90387–20814 | 14 – 24 |
| 90388–08802 | 25 – 21 |
| | 25 – 23 |
| 90388–10816 | 17 – 5 |
| | 21 – 7 |
| 90401–10812 | 31 – 18 |
| | 31 – 23 |
| | 31 – 26 |
| | 31 – 29 |
| | 33 – 23 |
| | 33 – 26 |
| 90401–20008 | 7 – 12 |
| 90413–06031 | 8 – 23 |
| 90430–06014 | 4 – 8 |
| | 5 – 16 |
| | 10 – 11 |
| 90430–08119 | 1 – 7 |
| 90430–08143 | 11 – 4 |
| 90430–10804 | 42 – 7 |
| 90445–217G3 | 32 – 8 |
| 90450–28001 | 6 – 7 |
| 90450–55804 | 8 – 4 |
| 90462–08225 | 11 – 24 |
| 90462–08806 | 11 – 20 |
| 90462–08810 | 7 – 18 |
| 90462–08812 | 11 – 19 |
| 90464–08009 | 41 – 38 |
| 90464–10008 | 23 – 36 |
| 90464–10800 | 43 – 22 |
| 90464–12013 | 31 – 34 |
| | 43 – 14 |
| 90464–12015 | 17 – 20 |
| 90464–13249 | 41 – 27 |
| 90464–14803 | 43 – 21 |
| | 43 – 23 |

| No. PEÇA | REF. NO. |
|---|---|
| 90464–15014 | 23 – 39 |
| 90464–15195 | 41 – 25 |
| 90464–16003 | 40 – 7 |
| 90464–16012 | 23 – 32 |
| 90464–16019 | 38 – 20 |
| 90464–20010 | 41 – 26 |
| 90464–22800 | 41 – 24 |
| | 43 – 12 |
| | 43 – 19 |
| 90464–26001 | 41 – 37 |
| 90464–30001 | 40 – 8 |
| 90464–30009 | 33 – 30 |
| | 41 – 42 |
| 90464–36005 | 41 – 28 |
| 90464–36800 | 41 – 22 |
| 90464–50800 | 41 – 41 |
| 90464–70800 | 41 – 23 |
| 90467–08003 | 19 – 35 |
| 90467–09006 | 23 – 34 |
| | 23 – 42 |
| | 23 – 51 |
| 90467–090A2 | 8 – 24 |
| 90467–11009 | 23 – 50 |
| 90467–110A3 | 8 – 38 |
| 90467–12052 | 8 – 43 |
| 90467–12085 | 33 – 14 |
| 90467–13802 | 8 – 42 |
| | 8 – 45 |
| 90467–15012 | 23 – 30 |
| 90467–16800 | 1 – 36 |
| 90467–16801 | 1 – 33 |
| | 1 – 35 |
| 90467–250A1 | 6 – 6 |
| 90480–01558 | 17 – 28 |
| | 23 – 21 |
| 90480–10003 | 39 – 6 |
| 90480–11009 | 39 – 15 |
| 90480–12581 | 9 – 11 |
| | 9 – 28 |
| 90480–12808 | 19 – 7 |
| | 19 – 17 |
| | 19 – 59 |
| | 24 – 6 |
| | 24 – 15 |
| | 24 – 26 |
| | 24 – 33 |
| | 24 – 44 |
| | 38 – 16 |

| No. PEÇA | REF. NO. |
|---|---|
| 90480–12815 | 18 – 4 |
| 90480–13001 | 39 – 4 |
| 90480–13001 | 17 – 16 |
| 90480–14004 | 37 – 6 |
| | 38 – 24 |
| 90480–14229 | 43 – 6 |
| 90480–15807 | 23 – 13 |
| 90480–15808 | 6 – 17 |
| 90480–15809 | 18 – 8 |
| 90480–18418 | 19 – 61 |
| 90480–18812 | 25 – 28 |
| 90501–06022 | 15 – 3 |
| 90501–080A2 | 15 – 8 |
| 90501–12743 | 32 – 34 |
| | 32 – 42 |
| 90501–22800 | 2 – 20 |
| 90506–23812 | 32 – 4 |
| 90506–26807 | 32 – 27 |
| 90508–18136 | 13 – 18 |
| 90508–183B9 | 32 – 12 |
| | 32 – 21 |
| 90508–29806 | 16 – 5 |
| 90520–03823 | 23 – 3 |
| 91312–05008 | 41 – 19 |
| 91312–05010 | 23 – 20 |
| | 23 – 26 |
| | 30 – 9 |
| 91312–05012 | 11 – 2 |
| 91312–06010 | 5 – 13 |
| 91312–06016 | 8 – 3 |
| | 42 – 11 |
| 91312–06020 | 1 – 23 |
| | 4 – 10 |
| 91312–06025 | 11 – 15 |
| 91312–06030 | 7 – 8 |
| | 34 – 3 |
| 91317–06012 | 43 – 17 |
| 91317–06020 | 30 – 5 |
| 91317–08025 | 21 – 11 |
| 91317–08030 | 21 – 9 |
| 91317–10020 | 17 – 23 |
| 91317–10045 | 17 – 24 |
| 91317–10060 | 17 – 7 |
| 91401–20012 | 33 – 18 |
| 91401–25015 | 32 – 14 |
| | 32 – 23 |
| | 32 – 38 |
| | 32 – 46 |

| No. PEÇA | REF. NO. |
|---|---|
| 92012–06016 | 43 – 20 |
| 92012–08030 | 33 – 19 |
| 92014–08012 | 11 – 3 |
| 92017–04020 | 24 – 39 |
| | 24 – 50 |
| 92902–08600 | 13 – 20 |
| | 28 – 28 |
| 92902–10200 | 17 – 8 |
| | 21 – 15 |
| 92907–04200 | 24 – 49 |
| 92907–10600 | 17 – 25 |
| 93101–20802 | 14 – 11 |
| | 14 – 27 |
| 93102–12891 | 16 – 10 |
| 93102–15801 | 5 – 5 |
| 93102–35803 | 14 – 30 |
| 93106–23002 | 28 – 4 |
| 93106–26815 | 26 – 3 |
| 93106–38046 | 28 – 8 |
| 93210–068F7 | 10 – 13 |
| 93210–108H5 | 40 – 13 |
| 93210–12803 | 10 – 3 |
| 93210–15566 | 42 – 10 |
| 93210–15620 | 33 – 7 |
| 93210–16716 | 1 – 29 |
| 93210–21801 | 42 – 4 |
| 93210–27807 | 5 – 20 |
| 93210–32816 | 11 – 6 |
| 93210–39802 | 8 – 2 |
| 93306–253YE | 28 – 3 |
| 93306–255Y9 | 14 – 8 |
| 93306–302X7 | 26 – 4 |
| 93306–30450 | 28 – 7 |
| 93311–420Y3 | 14 – 10 |
| | 14 – 26 |
| 93315–21570 | 5 – 4 |
| 93317–11096 | 5 – 3 |
| 93317–11295 | 16 – 9 |
| 93320–32403 | 20 – 5 |
| 93399–99932 | 22 – 38 |
| 93399–999Y3 | 21 – 1 |
| 93440–24200 | 14 – 4 |
| | 14 – 21 |
| 93440–28184 | 14 – 16 |
| 93440–52009 | 14 – 9 |
| 93450–16068 | 2 – 14 |
| 93501–04830 | 32 – 35 |
| | 32 – 43 |

| No. PEÇA | REF. NO. |
|---|---|
| 93605–10090 | 2 – 21 |
| 93900–00828 | 26 – 6 |
| | 28 – 17 |
| 94111–17805 | 26 – 5 |
| 94114–17805 | 28 – 16 |
| 94568–H1114 | 28 – 31 |
| 94591–61118 | 4 – 5 |
| 94700–00872 | 1 – 12 |
| 95022–06008 | 4 – 7 |
| 95022–06010 | 37 – 9 |
| | 38 – 29 |
| | 43 – 3 |
| 95022–06012 | 19 – 62 |
| | 25 – 4 |
| 95022–06014 | 17 – 18 |
| 95022–06020 | 6 – 3 |
| | 31 – 16 |
| | 31 – 20 |
| | 41 – 4 |
| 95022–06025 | 5 – 17 |
| | 7 – 17 |
| | 11 – 9 |
| | 11 – 12 |
| | 11 – 18 |
| | 11 – 23 |
| | 35 – 7 |
| | 43 – 4 |
| 95022–06050 | 11 – 13 |
| 95022–08012 | 1 – 6 |
| 95022–08014 | 23 – 17 |
| 95027–06010 | 9 – 3 |
| 95027–06012 | 31 – 32 |
| | 31 – 33 |
| | 43 – 8 |
| | 43 – 10 |
| 95027–06016 | 23 – 47 |
| | 43 – 13 |
| 95027–06025 | 31 – 13 |
| 95027–06045 | 18 – 6 |
| 95027–08012 | 23 – 40 |
| 95027–08035 | 9 – 17 |
| 95302–06600 | 16 – 15 |
| 95302–08600 | 28 – 29 |
| 95602–05100 | 42 – 29 |
| 95602–06100 | 31 – 9 |
| | 40 – 14 |
| 95602–06200 | 18 – 28 |
| 95602–10200 | 28 – 15 |

| No. PEÇA | REF. NO. |
|---|---|
| 95602–10200 | 32 – 7 |
| 95602–12100 | 20 – 10 |
| | 20 – 16 |
| 95602–14200 | 20 – 6 |
| | 26 – 12 |
| 95602–16200 | 28 – 24 |
| 95607–08200 | 9 – 31 |
| 95607–10100 | 21 – 14 |
| 95612–08625 | 1 – 8 |
| 95707–06500 | 25 – 9 |
| 95707–08500 | 9 – 22 |
| 95802–06010 | 30 – 11 |
| | 32 – 29 |
| | 38 – 27 |
| 95802–06012 | 42 – 25 |
| 95802–06016 | 42 – 15 |
| 95802–06025 | 42 – 17 |
| 95807–06014 | 19 – 39 |
| 95807–06016 | 42 – 27 |
| 95812–06012 | 23 – 11 |
| | 31 – 14 |
| 95812–06035 | 10 – 8 |
| 95812–06045 | 10 – 9 |
| 95812–06065 | 10 – 10 |
| 95817–08030 | 9 – 25 |
| 95817–10025 | 32 – 3 |
| 95822–06010 | 8 – 40 |
| 95822–06025 | 23 – 10 |
| | 23 – 16 |
| 95827–06014 | 33 – 29 |
| 95827–06025 | 6 – 14 |
| 97012–06020 | 16 – 20 |
| 97507–06525 | 40 – 19 |
| 97602–04212 | 31 – 12 |
| 97702–30016 | 37 – 4 |
| 97702–50012 | 19 – 51 |
| | 19 – 53 |
| | 19 – 63 |
| | 24 – 7 |
| | 24 – 16 |
| | 24 – 27 |
| 97702–50016 | 25 – 14 |
| | 37 – 7 |
| 97702–50025 | 8 – 32 |
| 97707–30505 | 6 – 13 |
| 97707–40020 | 39 – 13 |
| 97707–50016 | 18 – 22 |
| | 19 – 22 |

| No. PEÇA | REF. NO. |
|---|---|
| 97707–50016 | 19 – 25 |
| | 19 – 28 |
| | 38 – 26 |
| 98502–05016 | 42 – 5 |
| 98502–06012 | 8 – 11 |
| 98507–05012 | 30 – 8 |
| 98902–05020 | 8 – 35 |
| 99002–07600 | 13 – 21 |
| 99009–08400 | 5 – 11 |
| 99009–10400 | 7 – 5 |
| | 13 – 17 |
| 99009–12400 | 16 – 6 |
| 99009–15500 | 7 – 2 |
| 99530–08012 | 7 – 7 |
| | 11 – 8 |
| | 11 – 11 |
| 99530–10014 | 10 – 5 |
| 99530–14016 | 1 – 14 |
| | 1 – 30 |